'Atiqot 110, 2023

A Byzantine-Period Monastery at Ḥura

Daniel Varga and Rina Talgam[1]

A building identified as a monastery, probably associated with the nearby Byzantine settlement at Ḥorbat Ḥur, was paved with four mosaic pavements containing four Greek inscriptions and one bilingual inscription in Greek and local Syriac. The inscription in the prayer hall indicates that the building was a monastery, probably founded in 575 CE. The monastery's cemetery, located to its southwest, was well-preserved including four sealed graves of adult males, possibly monks. The mosaic art in the monastery deviates from the period's trends, depicting figurative images and implicit crosses. This, and the location of the monastery, suggest that the monastery served a diversified Christian population.

Keywords: northern Negev, Byzantine period, Christianity, mosaic, art, inscriptions, Greek, Syriac

Introduction

In November 2013, Carmel Bason Wald Infrastructure Ltd conducted trial sections at the entrance to Ḥura in the northern Negev, prior to the construction of an interchange on Road 31. Remains of an impressive structure from the Byzantine period were exposed in the trial sections, and in March 2014 a salvage excavation was carried out on site (Fig. 1; map ref. 192715/578040; Varga 2015).[2] The building, initially identified as a farmhouse, turned out to be a monastery, probably associated with the nearby Byzantine settlement at Ḥorbat Ḥur. Four mosaic pavements were revealed at the monastery, containing four Greek inscriptions

[1] Dr. Daniel Varga, Israel Antiquities Authority; Dr. Rina Talgam, The Hebrew University, Jerusalem.

[2] The excavation (Permit No. A-7058), on behalf of the Israel Antiquities Authority, was directed by Daniel Varga, with the assistance of Anat Rasiuk (recording of the cemetery), Vladik Lipschiz (inspection), Martin Pasternak and Tamar Gerser (area supervision), Yasar al-'Amor (administration), Mark Kunin, Avi Hajian, Rivka Mishayev and Roi Liran (surveying), Natalia Zak and Yakov Shmidov (drafring), Assaf Peretz and Niki Davidov (photography), Sky View (aerial photography), Daniel Weintraub (Syriac inscription), Yossi Nagar (physical anthropology) and workers from Ashqelon and Laqiya. The Hebrew version of the article was edited by Galit Samora-Cohen and translated into English by Zvi Gal.

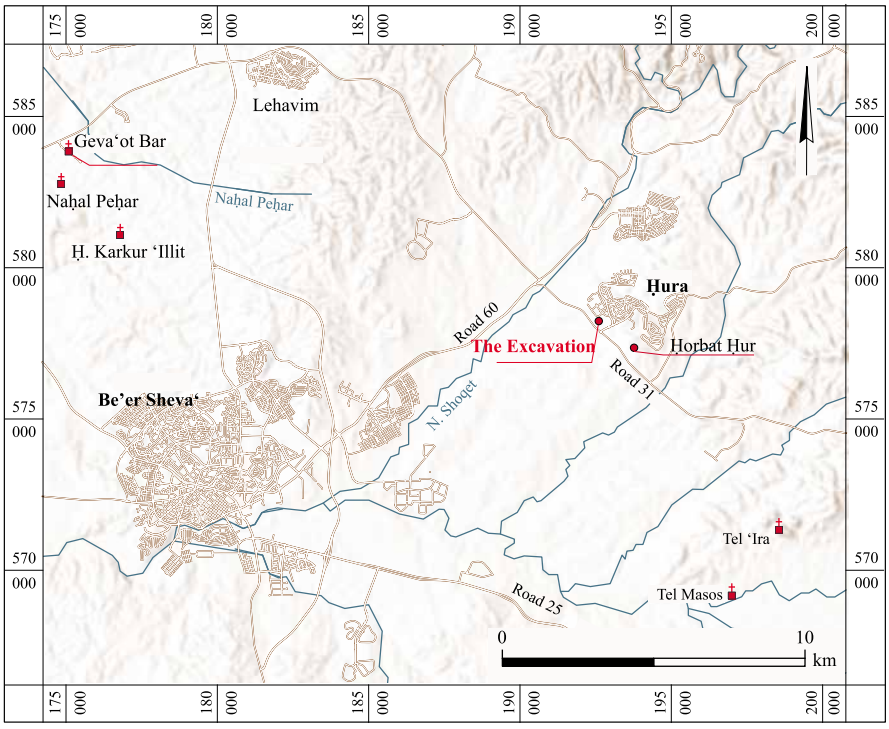

Fig. 1. Location map of the site and other monasteries in its vicinity.

and one bilingual one in Greek and local Syriac. The cemetery that served the monastery was found to its southeast, comprising about 40 cist graves.

The site is located on the southern slopes of the Yattir Hills (400 m above sea level). This area comprises moderate hills, bordering the Hebron Mountains in the north and the Be’er Sheva‘ Valley in the south. The site was first discovered by Yehuda Govrin in 1989 during the survey of Naḥal Yattir Map (Govrin 2002). The proximity of the site to the settlement at Ḥorbat Ḥur (200 dunams), located c. 500 m to its southeast (Fig. 1), raised the possibility that the monastery was used by its inhabitants. Ḥorbat Ḥur extends over two elongated hills generally oriented east–west, and was first occupied in the Roman period, probably as part of a fortification system built at the end of the first century CE along the military road (*Limes Iudaeae*) extending from ‘En Gedi to the Gaza seashore (Gihon 1975:156–161; Avi-Yonah 1984:168–175; for the scholarly debate regarding this road, see Shatzman 1983:31; Isaac 1990:129). Woolley and Lawrence (1914:48–49) claimed that Ḥorbat Ḥur was larger than Tel Sheva‘, and included buildings, courtyards and cisterns; they did not record remains of churches. The settlement reached its peak in the Byzantine period, with square buildings, some preserved one meter high, separated by alleys, rock-cut granaries and agricultural installations (Govrin 2002). Dozens of rock-cut cisterns, mostly bell-shaped, were also found in the settlement. Remains of a large basilical church (21 × 51 m) built of large flint stones (1.5 m high) were recorded at the northeastern end of the site, surrounded by several rooms (Figueras 1995). Around it were found dwellings (Sontag 2000; Peretz 2012), watchtowers (Nikolsky 2009; Ein Gedi 2001), water cisterns and graves, mostly dated to

the Byzantine period and some, to the Early Islamic period. Two agricultural farms were exposed nearby (Ein Gedi 2000; Varga 2002); other such farms probably existing in the area have not yet been discovered.

Other monasteries were discovered in the vicinity: at Geva‘ot Bar, c. 17 km northwest of Ḥura (Paran 2009); Naḥal Peḥar (“Mor House”; Paran 2009); Ḥorbat Karkur ‘Illit, between Geva‘ot Bar and Be’er Sheva‘ (Figueras 2004); Tel ‘Ira, c. 15 km southeast of Ḥura (Beit-Arieh 1999); and Tel Masos south of Tel ‘Ira (Kempinski and Volkmar 1977).

The Excavations

The Monastery

The monastery (21 × 28 m; Plan 1; Fig. 2) was divided into several spaces, described here from west to east: west wing, central courtyard (L59), narthex (L7), prayer hall (L8) and refectory (L4). The building’s outer walls were preserved for up to two courses. They were built of flint and limestone stones, with grouting of small stones and mud. The inner walls were dry-built and preserved for one course. The inner faces of all the walls were coated with light gray plaster. Remains of earlier walls and a mosaic floor were found in the western wing, pointing to the monastery having been built on the remains of an earlier monastery or a church.

The West Wing. At least three service rooms (L63, L65, L67; 5.0 × 6.5 m) were found in the west wing of the monastery, which was partially preserved. There may have been another room north of Room 67 that did not survive. The rooms were paved with white mosaics that were mostly destroyed when the building collapsed at the end of the Byzantine period or the beginning of the Islamic period. This dating is based on the fact that no pottery vessels from the Islamic period were found in the building. The southern room (L65) was enclosed by four walls (W200, W204, W205, W208); its floor was paved with a coarse white mosaic, of which only a few tesserae survived. A few potsherds were exposed in the fill above the floor (L46), most of them non-diagnostic fragments of jars, probably bag-shaped (not illustrated), and glass vessels dating to the sixth–seventh centuries CE (not illustrated; see Winter, this volume). An east–west double-faced wall (W214; 0.65 m wide) of an earlier structure, exposed below the floor of the room, belonged to an earlier structure. In the center of W208, a doorway led to the main room of this wing (L63); bag-shaped jars, of which only the lower part survived (not illustrated), were placed on both sides of the doorway. Room 63 was enclosed by four walls (W204, W205, W208, W209). Its floor was paved with a coarse white mosaic, of which only a few tesserae survived, most of them in its southwestern corner; only a few potsherds (not illustrated) were discovered in the room. Remains of a mosaic bedding belonging to an earlier building were exposed on the eastern side of the room; it extended into the courtyard and bore a bilingual inscription (see below, *The Earlier Mosaic in Room 63*; Fig. 6). In the center of W209 was an opening that led to the northern

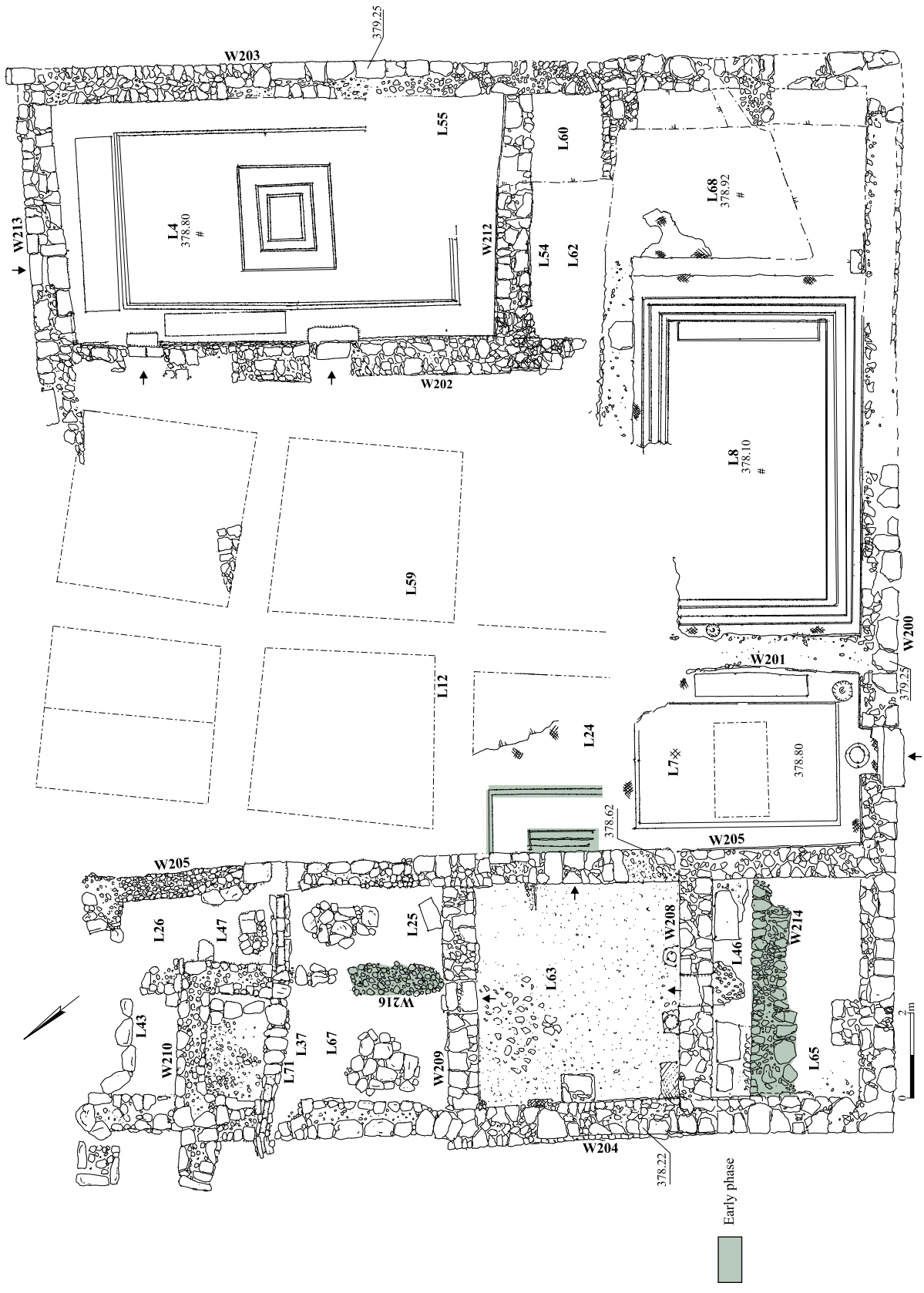

Plan 1. The monastery.

Fig. 2. The monastery, aerial view to the north.

room of the wing (L67); only three walls of this room survived (W204, W205, W209), and it is possible that its northern wall was robbed and destroyed. The floor of the room was also completely destroyed when the building collapsed. Remains of a covered drainage channel (L71) were found in the center of the room, below a pile of stones containing glass vessels dated to the Byzantine period (not illustrated; see Winter, this volume).

At the northern end of the room (L43, L26) were found pottery vessels, including LRC bowls (Fig. 5:1, 2, 4), a deep bowl (Fig. 5:7), a cooking-pot lid (Fig. 6:2) and non-diagnostic fragments of jars and cooking pots. Fragments of glass lamps dated to the Byzantine period were also discovered in the room (see Winter, this volume: Fig. 1:3, 4). Two wall segments belonging to the earlier structure (W216, W210) were uncovered below the original floor level of the room. These walls were built on bedrock, with almost no potsherds in their vicinity.

The Central Courtyard (L59). In the center of the building was an open beaten-earth courtyard, bounded by W202 on the east and W205 on the west. The northern wall was almost completely destroyed, probably due to the collapse of a cistern in the area. No signs of conflagration or violence were found and therefore, the destruction of the structure is

Fig. 3. The bilingual, Greek and local Syriac inscription, within the early mosaic pavement.

attributed to an earthquake that apparently occurred in this area in the Byzantine period. The courtyard was entered through an opening in W205 that led into it from Room 63 in the west wing. A moderate amount of pottery was discovered in the courtyard, including a bowl (Fig. 5:6) and bag-shaped jars (Fig. 7:3, 4). Glass vessels were also found (not illustrated; see Winter, this volume).

The Narthex (L7). An entrance room (4 × 6 m) bounded by three walls (W200, W201, W205) was located south of the courtyard. This room appears to have served as an entrance to the building on the south through W200; a stone threshold found in the center of the wall supports this assumption. A rectangular pit (1.2 × 2.5 m; Fig. 2) dug in the center of the room was probably a grave that was cleaned after the collapse of the building. The narthex was paved with a mosaic floor bearing an inscription written mostly in Greek and partly in local Syriac (Fig. 3; see Ustinova, this volume: Fig. 5). The date of the paving, 596 CE, appears in Greek, and a verse from Psalms appears in local Syriac: "This is the gate of the LORD; the righteous shall enter it" (Vainstub, Sokoloff and Varga 217:281). Sparse pottery finds were discovered here. An opening that led to the prayer hall (L8) was set in the eastern wall (W201) of the narthex.

The Prayer Hall (L8; 5 × 8 m; Fig. 4). The prayer hall lay east of the narthex (L7); it seems that another entrance led into it from the north, through the courtyard. In the eastern part of the prayer hall was a *bema* (L68), c. 0.15 m higher than the floor and separated from it by a chancel screen, of which a few fragments survived. Since the *bema* was close to the modern ground surface, it was almost completely destroyed, and it is unclear if there was an internal apse at its eastern end. An inscription indicating the construction date of the monastery (see Ustinova, this volume) was revealed in the prayer hall, as well as a few potsherds, including body fragments of Late Roman bowls (not illustrated), a cooking jug (Fig. 6:6) and fragments of glass vessels dated to the sixth–seventh centuries CE (not illustrated; see Winter, this volume).

The Refectory (L4). North of the prayer hall and east of the central courtyard, was a dining hall (5.5 × 10.0 m; Fig. 5) enclosed by four walls (W202, W203, W212, W213) and paved with a colorful mosaic with a Greek inscription at its center (see Ustinova, this volume: Fig. 3). Two entrances in W202 led into the room and one (a wicket) in W213. The floor

Fig 4. The prayer hall (L8), looking east.

Fig. 5. The refectory (L4), aerial view to the west.

of the dining hall was c. 0.4 m lower than the other floors of the building, and therefore two steps were built at each of the two western entrances. The location of the room, its size and especially, the motifs decorating its the mosaic floor (see below), point to its function as the monastery's refectory. Fragments of glass vessels (not illustrated) were found in an accumulation (L55) in the southeastern part of the dining hall (see Winter, this volume).

It is plausible that the monastery had additional wings or rooms that did not survive. The absence of monks' living quarters may be due to the destruction in the vicinity of the monastery, especially in recent decades. It is also possible that as in monasteries in Galilee, such as the monastery in Karmi'el (Ashkenazi and Aviam 2014), the monks lived in adjacent Ḥorbat Ḥur.

The Cemetery

The cemetery was located c. 15 m southeast of the monastery, and was discovered during supervision of development works that were carried out following the excavation. About 40 cist graves, built of white square and rectangular limestone slabs (1.9–2.1 m long, c. 0.6 m wide), were discovered in the cemetery. Four single burials arranged in rows, generally oriented east–west, were excavated; the heads of the deceased were on the east facing north. A preliminary examination of the bones showed that the deceased were adult males. A bronze Byzantine coin did not survive the cleaning, and thus yielded no information. Several walls made of flint and large limestone blocks were found adjacent to the graves, perhaps fences that enclosed the burial ground. Based on the proximity of the graves to the monastery and the identification of the individuals as adult males, it can be almost certainly concluded that this was the monks' cemetery.

THE MOSAIC FLOORS

Four mosaic floors were discovered in the monastery: an earlier floor, dating to the first half of the fifth century CE, revealed in Room 63 in the west wing; two floors dated to the last quarter of the sixth century CE, in the narthex (L7) and in the prayer hall (L8); and one, whose date could not be clearly determined, in the dining hall (L4).

The Early Mosaic in Room 63

The early mosaic revealed in this room was only partially preserved (see Ustinova, this volume: Inscription 1, Fig. 1); part of it was inside the room that was built in a later phase, and part of it extended to its courtyard to the east (see Plan 1). Within the room, the mosaic-bedding, made of coarse plaster, and a few white tesserae survived. In the courtyard to its east, the same bedding was found, as well as a mosaic section decorated with a complex lace pattern around a dedicatory inscription (Fig. 6). The lace pattern was made of yellow, orange, red and gray tesserae, as well as black and white ones, and comprised interlacing circles, where a pair of large circles was linked by a small circle, one half of the link overlapping

Fig. 6. Early dedicatory inscription surrounded by a lace-pattern frame in the courtyard.

one circle, and the other half, the other circle. At the center of each of the large circles was a medallion decorated with a flower, whose design varied from one medallion to another. Stepped rhombuses were set in the spaces between the strips that interlace with the large circles—four in each circle. On the outer and inner margins of the lace pattern, the strips of the guilloche formed a series of small, dense circles. A thin black strip consisting of one row of tesserae, bounded the guilloche pattern on both sides.

The outside of the lace pattern was bordered by a simple frame comprising four horizontal white, black and red strips, and an additional white strip. Each strip comprised two rows of tesserae. The tesserae in the margins of the mosaic were set in diagonal rows. The artistic and technical quality of the earlier mosaic was outstanding, and it was undoubtedly laid by experienced craftsmen. The tesserae were quite small, numbering 121–132 per square decimeter in the lace pattern.

The earlier mosaic pattern is not common. It strongly resembles the mosaic of the earlier northern church in Shillo, dated on the basis of inscriptions and historical evidence, to the end of the fourth century CE (Magen and Aharonovich 2012:170). The earlier mosaic from Ḥura is also similar to the mosaic of the earlier church in Bet ʻAnya (Bethany), dated to the 80s of the fourth century CE, based on its mention by Hieronymus in his translation of Eusebius' Onomasticon. Hieronymus changed Eusebius' text to update it, and he noted that there is now a church at the site (Saller 1950–1953:30–31, Pls. 20, 22–24a). Another parallel

comes from a room belonging to an earlier phase of the monastery on Mount Nebo (Piccirillo 1993:192–193, Fig. 282). The mosaic located underneath the chapel of the Theotokos, dates to 603/608 CE, a date that provides a *terminus ante quem* for the mosaic beneath it. Two other possible parallels, whose chronological context is unclear, are the mosaic in Hesban (Piccirillo 1993:255) and the mosaic from the Mukhraqa (Avi-Yonah 1981:358). Based on the mosaics from Shillo and Beit ʻAnia, it can be determined that guilloches of this type are mainly characteristic of the end of the fourth–beginning of the fifth centuries CE. Due to the complexity of the pattern, it is hard to assume that such a beautiful mosaic was originally intended to adorn the rooms of the service wing, and it seems that this area of the monastery changed its function over the years. It is most likely that this was the location of the church or the refectory in the first phase of the monastery.

The Narthex Mosaics (L7)

A bilingual dedicatory inscription (see Ustinova, this volume: Inscription 5, Fig. 5) and three mosaic carpets (see Fig. 3) were revealed in the narthex floor. The dedicatory inscription was set within a simple rectangular frame comprising a row of black tesserae. In the Greek part of the inscription the date is stated: 596 CE; however, it is doubtful whether this dates the entire mosaic (see below). The Greek part is not uniform, and there are signs that may indicate that the inscription from 596 CE replaced an earlier one: (1) The letters in the first line and the first two letters in the second line are twice as thick as the letters in the rest of the inscription; (2) quite a large space was noticed near the end of the first line, separating the letters Τ and W from the rest of the letters in the inscription, and it seems that the letters are part of the previous word and that the gap was filled after deleting a word that did not fit the new inscription; (3) The background tesserae in the middle of the first line of the inscription are yellowish white, whereas starting from the letter Τ at the end of this line and in the remaining two lines, the background tesserae are whiter. Yellowish white tesserae also appear in the vacant area on either side of the inscription. The possible explanation for the strange appearance of the inscription is that it combined old and new inscriptions. The thick lettersb that appeared in the first line up to its last third, belong to the old inscription, including a general introduction, with no names mentioned; therefore it was left in place while the rest of the inscription was replaced. Thus, it appears that the mosaic in Hall 7 is earlier than 596 CE. The second part of the last line of the dedicatory inscription was written in local Syriac. Although the text comprises only a short line, it is very important. Moshe Bar-Asher showed that Syriac inscriptions are mostly known in Israel in the north of Judea and the land of Benjamin. The southernmost appearance of Syriac-Palestinian inscriptions was recorded in the Einab al-Kabir church in the Hebron hills. The inscription from Ḥura extends the distribution of this type of inscriptions into the Negev (Bar-Asher 2012:393–396). The Syriac-Palestinian text quotes Psalms 118 (of the Septuagint version), "This is the gate to the Lord, the righteous will come in it", and its aim was to mark the mystical meaning of entering the church and participating in the ceremonies conducted there, i.e., the entrance into the gates of God passes through the church (Di Segni 1990:183–184). This

verse is often quoted in Israel and Syria on lintels and mosaic floors near church entrances, and it appears in three churches in the Negev: Be'er Sheva', Khirbat Abu-Ḥof and Kibbutz Magen (Alt 1921: No. 9; Tsaferis 1985:25; *SEG* 35.1549; Figueras 1996: No. 8; *SEG* 4, No. 2028). The location of the inscription, its orientation and content, indicate that Hall 7, adjacent to the prayer hall to its west, was used as a narthex.

The three mosaic pavements that adorned the floor of the hall were set within a single frame comprising one row of red stepped triangles. The northern mosaic was adorned with a network of rhombuses, with a stepped rhombus in the center of each.

The southern mosaic was adorned with flower buds, regularly set against the white background. Between the two mosaics was rectangular cist, to which the mosaics evidently related (Fig. 2). Although neither human bones nor a rectangular stone slab that covered the recess were discovered, it can be assumed that this was the grave of one of the monastery's abbots. The presence of the tomb of an abbot near a church is a well-known phenomenon, for example in the monastery of Martyrius at Ma'ale Adummim (Magen and Talgam 1990:91–92). The third mosaic was a small panel containing four-leaf rosettes between the bilingual inscription and the rectangular cist (Fig. 3). The white background of this small carpet was lighter than the white-yellowish color of the other two carpets. The tesserae at the margins of the floor, outside the frame of the stepped triangles that enclosed all three mosaics, were laid in diagonal rows, and a stepped-rhombus pattern was repeated. The southern entrance to the room was adorned with a medallion surrounded by a pattern of triangles, and in its center, four flower buds were depicted, unfolding to four directions from a common source, forming a cross-like shape. Four similarly arranged buds were found at the western edge of the floor, on the axis of the entrance to the church. A small settling pit lined with a white mosaic was found in the southeastern corner of the hall. The narthex mosaics comprised four colors of tesserae: white-yellowish, white, red and black. The number of tesserae was 36–63 per square decimeter. The simplicity of the patterns and their wide chronological range does not allow determining the exact date of the mosaics.

The Prayer Hall Mosaic (L8; see Fig. 4)

The floor of the bema in the prayer hall was found close to the surface, and c. 15 cm above the level of the hall; thus, mainly the plaster bedding of the mosaic survived. A section of the mosaic edges survived at the northern end of the bema, where it is possible to see white tesserae laid in diagonal rows and rhombuses decoration. There is also a small section of the inner frame, consisting of a row of black tesserae, two rows of white tesserae and another row of black tesserae.

The mosaic of the hall was well-preserved, except for some damage to the frame in the northwestern corner, and slightly east of the center of the floor, probably due to a fallen stone. The hall's mosaic was adorned with heart-shaped leaves in green, ocher, red and light gray with a black outline and a black petiole. The leaves were arranged in straight rows, the leaves of any given row placed in the spaces between the leaves of the previous one. The background of the mosaic was white, its tesserae forming a network of rhombuses

populated by the heart-shaped leaves. At the eastern end of the mosaic was a dedicatory inscription within a *tabula ansata*. The inscription was fully preserved, specifying that the mosaic was laid in 575 CE (see Ustinova, this volume: Inscription 2, Fig. 2). The *tabula ansata* was confined by a row of black tesserae, two rows of white tesserae and another row of black tesserae. The handles of the *tabula* were filled by red stones. The entire mosaic was surrounded by a rich frame (59 cm wide) of three decoration bands: (1) a repeated pattern of stylized lotus flowers alternately arranged in two opposite directions; (2) a double guilloche; (3) a curling ribbon that creates a three-dimensional impression. The tesserae incorporated in the frame were white, black, red, orange, pink, green, yellow, dark ocher, light ocher and gray. These decorative bands were common throughout the Byzantine period. The edges of the mosaic were white and the tesserae were laid in diagonal rows, except for the section in front of the bema opening. This area was decorated with a thin red band with black margins. The mosaic that separated the decorative band from the bema was not preserved. The area at the foot of the bema, on both sides of the opening, was adorned with a row of rhombuses recurring at regular intervals. In most parts of the mosaic the number of tesserae was uniform, 70–89 per square decimeter.

The closest parallels for the pattern adorning the prayer hall is the mosaic floor of the apse in the large chapel of Martyrius Monastery at Ma‘ale Adummim (Magen and Talgam 1990:125–130) and the baptistery mosaic in the church complex discovered at Be’er Shema‘ (Gazit and Lender 1993). Both mosaics were dated to the second quarter of the sixth century CE; this date corresponds to the date mentioned in our inscription.

The Dining Hall Mosaic (Refectory; L4; see Fig. 5)

The refectory mosaic exhibited a rather innovative composition, although its motifs are known from other mosaics. The mosaic was decorated with a network of rhombuses created by flower buds. A circular inflorescence-like decoration was found at the meeting points between the rhombuses. In the center of each rhombus was a smaller rhombus. The mosaic frame comprised a row of small black triangles against a white background, bordered by a thin black band. A small hexagon with a rhombus inside was depicted near the southwestern corner of the mosaic, projecting from the frame.

In the center of the rhombuses mosaic was a rectangular panel surrounded by two frames and a dedicatory inscription within it (see Ustinova, this volume: Inscription 3, Fig. 3). The narrow (23 cm wide) inner frame was decorated with a repeating pattern of four-leaf rosettes that touched each other; their outline was white and the interior was red against a black background. The external frame (42 cm wide) had a white background and was decorated with a variety of patterns. Four obliquely placed amphorae were depicted in its corners. The high-toe amphorae had a rounded body, a narrow neck and S-shaped handles. It is evident that the artist attempted to depict a diversified depiction of the amphorae and therefore, their decorative patterns are different, as well as their colors: three are red, and one is black; the lower body of two of the opposite amphorae was surrounded by a circle of leaves. On the body of the amphora in the southwestern corner of the frame was a small

white circle in which the tesserae arrangement formed a cross, while on the shoulder of the southeastern amphora there were three white tesserae, apparently imitating an inlay of mother-of-pearl. The other two amphorae, with a red body, were decorated with six small circles around a central one. In one of these amphorae, the outline comprised black circles with a white tessera in their center, and in the other—the circles were smaller and white. The motifs incorporated in the frame between the amphorae are arranged so that each side matches that opposite it. A black and white medallion was depicted on the northern side, in the center of which was a cross-shaped Greek inscription, bearing the words *life* and *light* (see Ustinova, this volume: Inscription 4, Fig. 4). The inscription was written in white letters on a black background. The medallion was surrounded by three rings: a white ring, a ring of black stepped triangles on a white background, and a thin black ring. Two woven baskets, overflowing with grapes and lying on high-footed platters, flanked the medallion. Among the motifs and beside them were delicate plants bearing flowers. On the parallel, southern side, opposite the medallion, was a cup of grapes surrounded by a pair of poultry and delicate fruit-bearing plants. In the center of the eastern and western sides there was a medallion: the eastern one was adorned with a four-petal rosette, surrounded by additional four leaves, and flanked by a ribbon shaped like the figure eight, and a Solomon's knot that formed the shape of a cross; the western medallion was adorned with a concentric ornament consisting of a ring of black triangles and three rings in ocher, red and black, flanked by a ribbon shaped like the figure eight.

A mosaic panel (82 cm wide), surrounded by a thin black frame, was adjacent to the northern side of the rhombuses mosaic. The panel was decorated with two rows of four-petal rosettes, and between them was a row of squares decorated with interchanging, rainbow-style bands, and a single square adorned with a Solomon's knot. In the spaces between the rosettes and the squares, rhombuses were inserted.

Adjacent to the southern side of the rhombuses mosaic was a mosaic panel that extends to the hall's southern wall (W212). It was decorated with a pattern of scales with black flower buds (semis). West of the rhombuses mosaic was an additional rectangular, narrow panel, adorning the edge of the mosaic floor, in the section between the two steps adjacent to the openings leading to the refectory. This narrow panel was bordered by a simple black frame, and was decorated with an alternating pattern of rhombuses and circles; the white tesserae on its margins were laid in horizontal rows.

The refectory was paved with tesserae in ten colors: red, pink, dark ocher, light ocher, light yellow, dark gray, gray, black and white, as well as with white-grayish marble tesserae. The number of tesserae in one square decimeter varied between 56—in the margins, the central panel, and the band of rosettes and squares—and 80 in the rhombuses network and in the frame of rosettes and the dedicatory inscription.

Discussion

The refectory mosaic was almost entirely preserved, except for a rectangular recess (c. 0.5 m wide, c. 2 m long) adjacent to the pair of entrances on the west, caused by a modern, illicit

digging of a backhoe. The mosaic on the southeastern part of the rhombuses mosaic suffered some damage from falling stones. Signs of ancient repair with white mosaic patches were visible in the band of rosettes and squares in the northern part of the floor.

Although the depiction of the grape baskets and amphorae befit a dining room, it is clear that the mosaic designers depicted them first and foremost for their Christian meaning. The inscription in the medallion incorporated in the center of the northern side of the frame of the dedicatory inscription reinforces this claim. It is not a coincidence that the direction of the inscription matched the reading direction of the central inscription, and the words *life* and *light*, inscribed in the center of the medallion, alluded to Jesus not only based on the shape of the cross they formed, perceived as a tree of life, but also due to their meaning. Similar examples are found on metal ampoules from the Church of the Holy Sepulcher in Jerusalem, on which it was written: "Oil from the Tree of Life", and which contained oil from the cross on which Jesus was crucified (Feuchtwanger 1988:47); a clay seal for Sacramental Bread, produced in the country in the fifth century CE and bearing in its center a cross flanked by the figures of Peter and Paul, and the inscription, "The source of life is the cross, God's blessing on us", written along its edge (Weizmann 1979:628–629). As for the word *light*, already in the New Testament Jesus is equated with light (Matthew 16:4; T*he Epistle to the Ephesians* 5:14). In the Gospel of John (1:4–5) the words life and light appear together: "In him was life and life was the light of man", and in Verse 9 of the same chapter it is said: "*That* was true light which lights every man". Early Christian theologians, such as Clement of Alexandria (Clement of Alexandria, Stromata, III, 17, 103, 4; Underwood 1950:97–101) also reiterate the same idea. Since the beginning of Christianity, baptism has been considered an act of light descending into the world, and therefore the inscription from Ḥura may be instructive regarding the crucifixion, the Eucharist ceremony that symbolizes it and the baptism. Inscribing metal crosses was common and sometimes even on crosses in mosaic floors, as for example in the mosaic at Deir Ein ʻAbta in the southern part of the Dead Sea, where the words "good end" were written on a cross standing between a pair of sheep (Piccirillo 1993:336). The fact that the Sacramental Bread was stamped with inscriptions similar to the inscription in the medallion from Ḥura, and that a cross featuring a Christogram bearing the letters *alpha* and *omega* appeared on patens—a term relates to plates used to distribute the Communion Bread during the Mass ceremony—suggests that what appears at first glance in the Ḥura mosaic to be medallions, is an image of patens (Weitzmann 1979:610–611). This proposal also relies on depictions of patens in the art of the period, for example in the wall mosaic in the church of San Vitale in Ravenna, where Abel and Melchizedek were depicted on both sides of the church altar. A wine vessel was placed on the altar, flanked by two patens (Cesaretti and Guadalupi 2005:110–111). Melchizedek, King of Shalem, who welcomed Abraham with bread and wine, is presented in the Christian tradition as a prefiguration of Jesus and as a justification for the existence of a priesthood dynasty prior to that of the House of Aharon. The paten held in Melchizedek's hands is similar to the medallion on the northern side of the outer frame surrounding the panel with the inscription. Additional images of patens along with wine vessels are depicted in the mosaic panel at the foot of the bema in the

church of Bishop Isaiah in Jerash (Piccirillo 1993:294–295), and in the stage mosaic at Horbat Midras. The shape of the amphorae at the corners of the frame in the Ḥura mosaic and their decoration indicate that the artist did not mean to depict simple wine containers, but rather fine vessels inlaid with jewels. Jesus' crucifixion was indicated in various manners within the refectory inscription: in the cross-like inscription, in the representation of the Eucharist components, as well as in the image of Solomon's knot, which frequently substituted for the cross. Depicting crosses in mosaic floors had been prohibited by an Imperial edict in 427 CE. Although the edict did not lead to the complete disappearance of crosses from the floors, their number notably decreased (Talgam 2014:475–477). Along with this prohibition developed a phenomenon of presenting geometric patterns, or woven patterns that formed or contained implied crosses. This design enabled each spectator to see what he/she desired; some noticed the cross and others referred to it as a geometric ornament (Talgam 2014:206).

The designers of the decoration in the refectory chose to depict in the center of the hall that served for gathering and eating, motifs with liturgical meaning, and even referred implicitly to the cross. Presumably, this part of the hall remained constantly bare and wooden tables and benches were placed along the walls. The patterns incorporated in the refectory mosaic made it possible to discuss issues of meaning and style that are difficult to discuss in abstract geometric mosaics, such as the floors of the narthex, or the prayer hall. Representations of objects such as the baskets of grapes and amphorae, and especially of the pair of birds on the southern side of the inscription's frame, allowed ananalysis of additional aesthetic and formal elements. The mosaic style was deceptive due to the existence of contradictory characteristics. The grape baskets and platters, for example, created an illusion of volume, mostly due to their depiction in a three-quarter view (an object simultaneously described from lateral and top views), while the depiction of the wine amphorae created a flat impression. The pair of birds in the scene revealed that the artist attempted to depict movement and anatomical details. The small size of the figures emphasized the rich colors, and there were even areas in the mosaic where the colors were free of contrasting contours. The design of the plants was schematic, but the depiction of the thin curved branches and their free layout created a sense of motion. Indications of volume are of lesser quality than those practiced in other classical mosaics created in the region in the third quarter of the fifth century CE. However, the flattend depiction of the amphorae is not as conspicuous as in the mosaics at the end of the fifth–beginning of the sixth centuries CE. The stylistic features of the mosaic are typical of the last quarter of the sixth century CE, in accordance with the date of the dedicatory inscription in the prayer hall (Talgam 2014:134–135).

The mosaics of the Ḥura monastery are of high artistic and technical level. The earlier geometric mosaic in Room 63 required a high skill due to the complexity of the pattern and the accuracy it required. The white, orderly background of the mosaic in the prayer hall and the careful layout of its leaf-pattern, also testify to work done by excellent artisans. The pair of birds and the grape baskets in the refectory demonstrate the artist's skill to depict animals and objects. With the exception of this pair of birds, it is evident that in the four mosaics discovered in the Ḥura monastery, the artist refrained from depicting images. This

was not the result of a lack of talented artists who could execute figurative descriptions, but a recurring phenomenon in many church mosaics in the country during the Byzantine period, attesting that it was a matter of a choice. Some of these mosaics are earlier and have been replaced over time by figurative mosaics, but there are reverse cases, as well. Many of the non-figurative mosaics are of high technical level, and it seems that in these cases too the decision was made not due to economic considerations or unavailability of mosaic artists. Thus, it seems that even prior to the deliberate destruction of figures in churches that took place in the eighth century CE, there were congregations that refrained from portraying figurative images, like in the Ḥura monastery. Mundell (1977) suggested that the non-figurative trend preceded iconoclasm and was typical of the wall decorations in the Syrian monophysite churches; this claim has not yet been proven in floor mosaics. The Syrian-Palestinian inscription in the narthex mosaic does show an affinity to Syrian Christianity, but one must be careful not to be so conclusive. It is possible that due to its location on the road and outside the settlement, the monastery served populations that were associated with diverse Christian movements at the time.

The date of the earlier lace-like mosaic can be determined based on technological considerations to the earlier phase of W205 that cut it. During the years of its existence, the monastery underwent internal changes, and dating the mosaic to the beginning of the fifth century CE points to the monastery having been founded early in the Byzantine period, long before the date that appears on the inscriptions in the prayer hall and the narthex mosaics. The establishment of the monastery during this period and its location outside the boundaries of the settlement, suggest that it probably had a role in Christianizing this area of the Negev, in addition to its role in hosting pilgrims and monks on the way from Sinai Desert and South Arabia to Palestine. Dan (2006:22–31) argued that the conversion of the nomadic Arab population and sedentary inhabitants in the south of the country was gradual. His research shows that despite the missionary activity, most of the Negev population remained pagan, even in the fifth century CE, although in small urban centers, such as Shivta, Mamshit, Be'er Shev'a, Niẓẓana and 'Avedat, there were churches. In his opinion, conversion into Christianity in the south of the country was not completed even in the sixth century CE—a period of a quite stable and large Christian population. The high quality of the mosaics in both the earlier and later phases indicates that despite the small size of the monastery, its strong economy enabled the hiring of expert artists.

THE POTTERY

The excavation of the monastery yielded a rather small pottery assemblage, probably due to an orderly abandonment of the building following an earthquake. Bowls, cooking pots and large storage vessels, such as amphorae and jars, as well as jugs, were found.

Bowls (Fig. 7).— Local bowls, mainly including imitations of Late Roman Ware C (LRC; Nos. 1–4), Cypriot Red Slip (CRS; No. 5) and African Red Slip (ARS; No. 6) bowls. Some deep bowls were also discovered (No. 7).

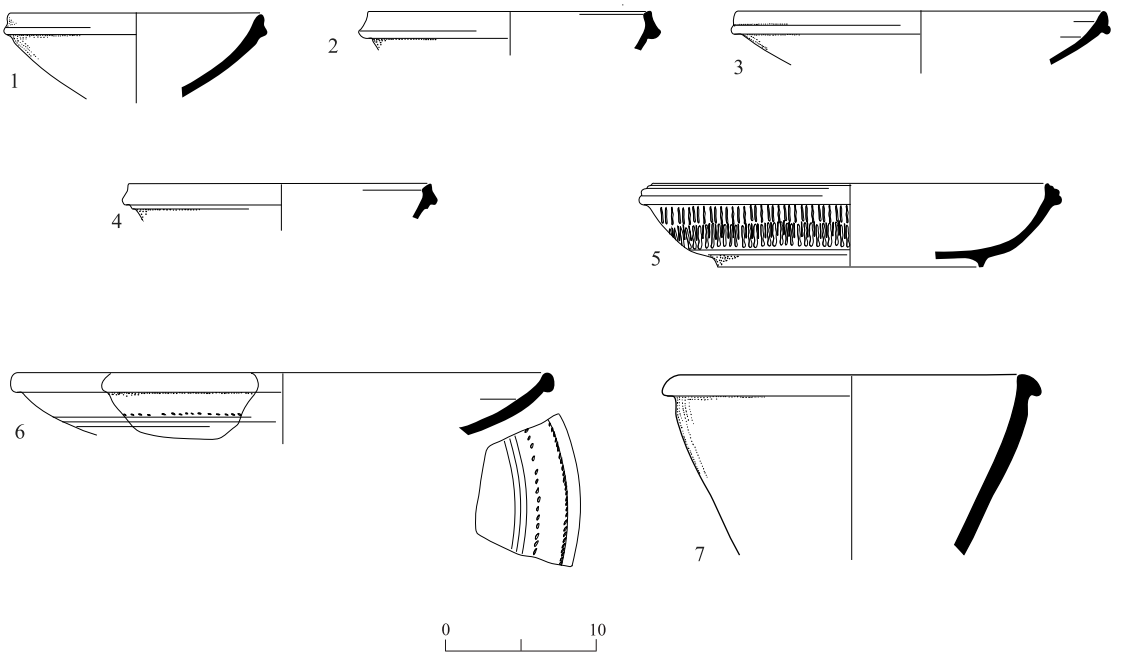

Fig. 7. Pottery: bowls.

No.	Vessel	Locus	Basket	Description	Parallels and Date (CE)
1	LRC bowl	43	1128	Brown-orangey-reddish clay, grits of various sizes	Figueras 2004: Fig. 30.5
2	LRC bowl	25	1049	Brown-red clay	Hayes 1972:329– 330, 336–337, LRC, Form 3C (second half of 5th c.–first half of 6th c.)
3	LRC bowl	60	1143	Brown-orange clay	Hayes 1972:332, 335, 338, Fig. 68:28, LRC, Type H (first third of 6th c.)
4	LRC bowl	26	1123/4	Brown clay	Hayes 1972:330, Fig. 67:7, LRC, Form 3
5	CRS bowl	60	1143/7	Brown-orange clay, red slip ext.	Hayes 1972:334, Fig. 69:32, CRS Form 4 Ustinova and Nahshoni 1994: Fig. 7.11
6	ARS bowl	59	1137/4	Brown-orange clay	Hayes 1972:344, Fig. 7, Form 9 Rosenthal-Heginbottom 1988: Fig. 1.6 Ustinova and Nahshoni 1994: Fig. 7.2
7	Deep bowl	43	1110/1	Brown-orange clay	Sontag 2000: Fig. 194:1

Cooking Vessels (Fig. 8).— Casseroles (Nos. 1 ,2), a lid (No. 3), cooking pots (Nos. 4, 5) and a cooking jug (No. 6) were found. Some of the vessels first appear in the fourth–fifth centuries CE (Nos. 1, 2) and continue into the sixth century CE. Other vessels are typical of the sixth–beginning of the seventh centuries CE.

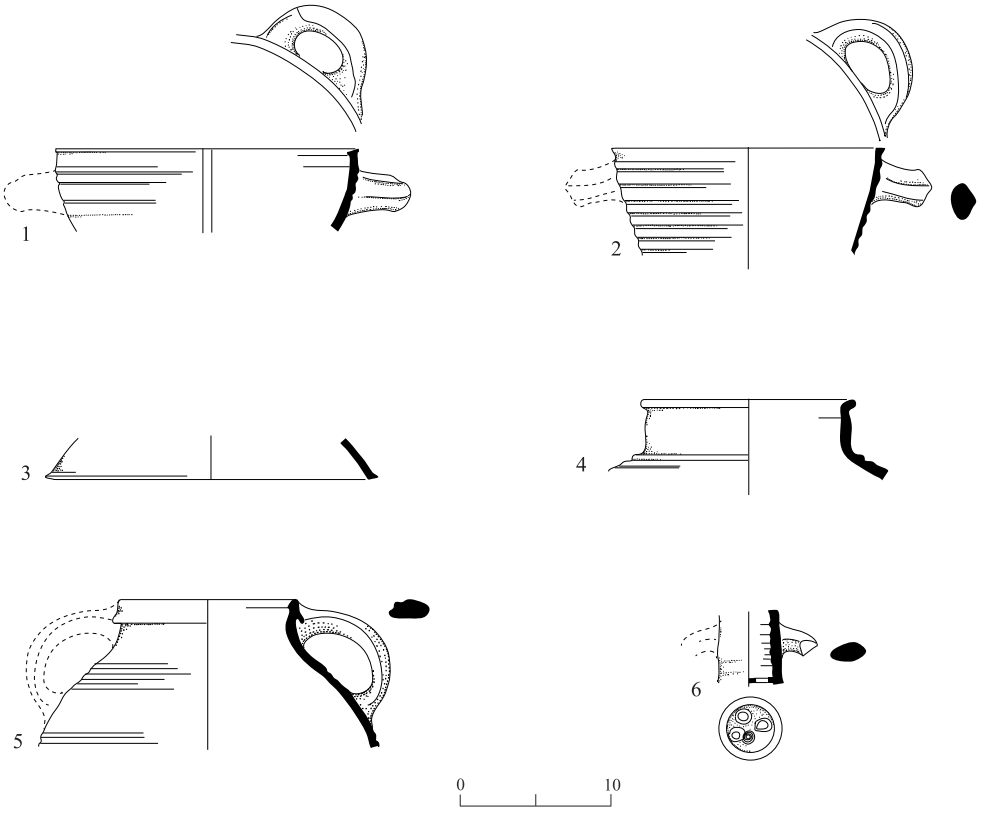

Fig. 8. Pottery: cooking vessels.

No.	Vessel	Locus	Basket	Description	Parallels and Date (CE)
1	Casserole	60	1139/6	Brown-red core, white grits of various sizes; dark brown int.; brown-orange ext.	Magness 1993:211–213, Form 1:12 (end of the 3th c.–8th/9th c.)
2	Casserole	60	1143/1	Brown-red core; dark brown int.; brown-orange ext.	Rosenthal-Heginbottom 1988: III.136 Ustinova and Nahshoni 1994: Fig. 6.7
3	Lid	25	1049	brown clay, white grits	Magness 1993:215 (end of 3th/ beginning of 4th c.–9th/10th c.)
4	Cooking pot	60	1139/1	Dark brown clay, red core, white grits of various sizes	Rosenthal-Heginbottom 1988: IV.187 Ustinova and Nahshoni 1994: Fig. 6.14
5	Cooking pot	26	1100/1	Brown-red core; dark brown int.; brown-orange ext.	Ustinova and Nahshoni 1994: Fig. 6.14
6	Cooking jug	68	1157/2	Brown-orange clay	Figueras 2004: Fig. 35.30

Jars and Juglets (Fig. 9).— Most of the jars are Byzantine bag-shaped jars, typical of the sixth century CE. Several Gaza jars, characteristic of the fifth–beginning of the seventh centuries CE (No. 1) were also found. The bag-shaped jars found in the monastery are characteristic of the sixth century CE (Nos. 3, 4), apart from one type (No. 2) that first appeared in the second century CE, but remained in use until the sixth century CE. Two jugs (Nos. 5, 6) were characteristic of the sixth century CE, although one of them (No. 6) continued until the eighth century CE.

The pottery assemblage from the monastery is very poor. It includes local vessels alongside imitations of Cypriot and North African bowls. The assemblage dates to the sixth–beginning of the seventh centuries CE. Several vessels appeared in the fifth and continued in use until the sixth century CE. No Early Islamic-period sherds were found.

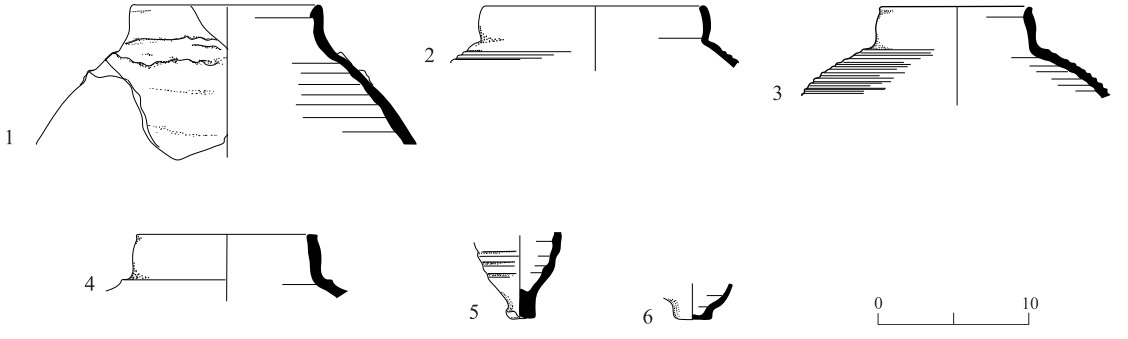

Fig. 9. Pottery: jars and juglets

No.	Vessel	Locus	Basket	Description	Parallels and Date (CE)
1	Gaza jar	60	1143	Brown-red clay, white small grits	Majcherek 1995:166–169, Pls. 5:1; 6:3 (mid-5th–6th c.) Johnson 2008:97, 184:1175 (4th–6th c.)
2	Bag jar	60	1143/4	Brown clay, dark and white grits	Peleg and Reich 1992:153, Fig. 16:6 (2nd–mid–6th)
3	Bag jar	59	1137/3	Brown-orange clay, white grits	Ustinova and Nahshoni 1994: Fig. 4
4	Bag jar	59	1137/5	Brown clay, dark and white grits	Rosenthal-Heginbottom 1988: III.1 Ustinova and Nahshoni 1994: Fig. 4.1
5	Juglet	37	1120	Light brown, orangey-yellowish clay	
6	Juglet	62	1144	Orange clay, a few white grits; remnants of brown-red color	Johnson 2008:141:336 (mid 6th–8th c.)

SUMMARY

The inscription in the prayer hall indicates that the building uncovered at Ḥura was a monastery, probably founded in 575 CE. The monastery was well-integrated in the settlement system of the northern Negev in the Byzantine period, in the center of which was the town of Be'er Sheva' surrounded by villages, farmsteads and monasteries.

Located near the Byzantine settlement at Ḥorbat Ḥur, the Ḥura monastery was probably built alongside the road that connected Transjordan and the Be'er Sheva' Valley. Its location on the outskirts of an urban settlement may explain the absence of living quarters in the building, although it is possible that another building or buildings were located to the north of the main building, opposite the entrance to the dining hall—an area severely damaged by recent earthworks. On the other hand, the monastery's cemetery, located to its southwest, was well-preserved. The four sealed graves were found empty, apart from the bones of adult males, possibly monks. The mosaic art in the monastery deviates from the period's trends, for example, the paucity of figurative depictions and the implicit appearance of crosses on the floors. This, and the location of the monastery, suggest that the monastery served a diversified Christian population.

A small assemblage of local pottery was revealed in the excavation of the monastery, possibly the result of an orderly abandonment of the structure after an earthquake. The high quality of the mosaics and inscriptions in the various halls indicate a fairly well-established monastery. The lack of Early Islamic finds attests that the building was not occupied after the Byzantine period, and over time it fell into ruin and was covered by loess soil.

REFERENCES

Alt A. 1921. *Die griechischen Inschriften der Palaestina Tertia westlich der 'Araba* (Wissenschaftliche Veröffentlichungen des deutsch-türkischen Denkmalschutz-Komandos 2). Berlin–Leipzig.

Ashkenazi J. and Aviam M. 2014. *Small Monasteries in Galilee in Late Antiquity: The Test Case of Karmiel in Knowledge and Wisdom: Archaeological and Historical Essays in Honor of Leah Di* Segni. Milano. Pp. 161–178.

Avi-Yonah M. 1981. *Art in Ancient Palestine: Selected Studies*. Jerusalem.

Avi-Yonah M. 1984. *Geographic History of Eretz-Israel: From the Returnees of Zion to the Beginning of the Beginning of the Arab Conquest, including Thirteen Maps.* Jerusalem.

Bar-Asher M. 2012. Syropalestinian Inscription from the Church at 'Anab el-Kabir. In N. Carmine ed. *Christians and Christianity: Churches and Monasteries in Judea* (JSP 16). Jerusalem. Pp. 393–395.

Beit-Arieh I. 1999. *Tel Ira: A Stronghold in the Biblical Negev* (Tel Aviv University Institute of Archaeology Monography Series 15). Tel Aviv.

Cesaretti P. and Guadalupi G. 2005. *Ravenna Gli splendori di un Impero*. Bologna.

Dan Y. 2006. *Studies in the History of Palestine in the Roman-Byzantine Period*. Jerusalem.

Di Segni L. 1990. The Greek Inscriptions in the Northern and Eastern Churches at Herodion. In G.C. Bottini, L. Di Segni and E. Alliata eds. *Christian Archaeology in the Holy Land: New Discoveries; Essays in Honour of Virgilio C. Corbo, OFM* (SBF Collectio Maior 36). Jerusalem. Pp. 177–190.

Ein Gedi M. 2001. Ḥorbat Ḥur. *HA–ESI* 113:112*.

Feuchtwanger N. 1988. The Metal Ampullae from Jerusalem from the Late Sixth Century. In D. Yaakobi and Y. Tsafrir eds. *Jews, Samaritans and Christians in Byzantine Palestine*. Jerusalem. Pp. 27–52 (Hebrew).

Figueras P. 1995. Monks and Monasteries in the Negev Desert. *LA* 45:401–450.

Figueras P. 1996. New Greek Inscriptions from the Negev. *LA* 46:265–284.

Figueras P. ed. 2004. *Ḥorvat Karkur ʻIllit: A Byzantine Cemetery Church in the Northern Negev; Final Report of the Excavations 1989–1995* (Beer-Sheva XVI). Be'er Sheva'.

Gazit D. and Lender Y. 1993. The Church of St. Stephen at Ḥorvat Be'er-Shemʻa. In Y. Tsafrir ed. *Ancient Churches Revealed*. Jerusalem. Pp. 273–276.

Gichon M. 1975. *Limes* Sites in the Negev. *Eretz-Israel* 12:149–166 (Hebrew).

Govrin Y. 2002. *Map of Naḥal Yattir (139)* (Archaeological Survey of Israel). Jerusalem.

Hayes J.W. 1972. *Late Roman Pottery*. London.

Isaac B. 1990. *The Limits of Empire: The Roman Army in the East*. Oxford.

Johnson B.L. 2008. The Pottery. In J. Patrich. *Archaeological Excavations at Caesarea Maritima, Areas CC, KK and NN; Final Reports* I: *The Objects*. Jerusalem. Pp. 13–206.

Kempinski A. and Volkmar F. 1977. *Excavations at Tel Masos (Khirbet El-Meshâsh): Preliminary Report of the Third Season, 1975.* Tel Aviv.

Magen Y. and Aharonovich E. 2012. The Northern Churches at Shiloh. In N. Carmine ed. *Christians and Christianity: Churches and Monasteries in Samaria and Northern Judea* (JSP 15). Jerusalem. Pp. 161–208.

Magen Y. and Talgam R. 1990. The Monastery of Martyrius at Maʻale Adummim (Khirbet el Muraṣṣaṣ) and Its Mosaics. In G.C. Bottini, L. Di Segni and E. Alliata eds. *Christian Archaeology in the Holy Land: New Discoveries; Essays in Honour of Virgilio C. Corbo, OFM* (SBF Collectio Maior 36). Jerusalem. Pp. 91–152.

Magness J. 1993. *Jerusalem Ceramic Chronology: Circa 200–800 CE* (*JSOT*/ASOR Monograph Series 9). Sheffield.

Majcherek G. 1995. Gazan Amphorae: Typology Reconsidered. In H. Meyza and J. Młynarczyk eds. *Hellenistic and Roman Pottery in the Eastern Mediterranean—Advances in Scientific Studies* (*Acts of the II Nieborów Pottery Workshop; Nieborów, 18–20 December 1993*). Warsaw. Pp. 163–178.

Mundell M.M. 1977. Monophysite Church Decoration. In A. Bryer and J. Herrin eds. *Iconoclasm: Papers Given at the Ninth Spring Symposium of Byzantine Studies University of Birmingham March 1975*. Birmingham. Pp. 59–74.

Nikolsky W. 2009. Ḥura, Naḥal Shoqet. *HA–ESI* 121 (January 4). https://www.hadashot-esi.org.il/Report_Detail_Eng.aspx?id=982&mag_id=115 (accessed January 14, 2019).

Paran N.S. 2009. Naḥal Peḥar. *HA–ESI* 121 (January 14). http://hadashot-esi.org.il/Report_Detail_Eng.aspx?id=1018&Mag_id=115 (accessed June 21, 2020).

Peleg M. and Reich R. 1992. Excavations of a Segment of the Byzantine City Wall of Caesarea Maritima. *'Atiqot* 21:137–170.

Peretz I. 2012. Ḥura. *HA–ESI* 124 (November 27). https://www.hadashot-esi.org.il/Report_Detail_Eng.aspx?id=2112&mag_id=119 (accessed June 21, 2020).

Piccirillo M. 1993. *The Mosaics of Jordan* (ACOR Publications 1). Amman.

Rosenthal-Heginbottom R. 1988. *Excavations at Reḥovot in the Negev* I: *The Northern Church* (Qedem 25). Jerusalem.

Saller S.J. 1950–1953. *Excavations at Bethany (1949–1953)*. Jerusalem.

Shatzaman I. 1983. Security Problems in South Judea Following the Great Revolt. *Cathedra* 30:3–32 (Hebrew).

Sontag F. 2000. Be'er Sheva', Ramot. *HA–ESI* 111:91*.

Talgam R. 2014. *Mosaics of Faith; Floors of Pagans, Jews, Samaritans, Christians, and Muslims in the Holy Land.* University Park.

Tsaferis V. 1985. Mosaics and Inscriptions from Magen. *BASOR* 258:17–32.

Underwood P.A. 1950. The Fountain of Life in Manuscripts of the Gospels. *DOP* 5:41–138.

Ustinova Y. This volume. The Inscriptions from the Ḥora Monastery.

Ustinova Y. and Nahshoni P. 1994. Salvage Excavations in Ramot Nof, Be'er Sheva. *'Atiqot* 25:157–177.

Varga D. 2002. A Farmhouse at Giv'at Maḥaṭ (Ḥura). *'Atiqot* 43:107*–113* (Hebrew; English Summary, Pp. 259–260).

Vainstub D., Sokoloff M. and Varga D. 2017. New Christian Palestinian Aramaic Inscription in a Mosaic Pavement at Ḥura, Israel. *JOS* 129:279–285.

Weizmann K. ed. 1979. *Age of Spirituality: Late Antique and Early Christian Art, Third to Seventh Century: Catalogue of the Exhibition at the Metropolitan Museum of Art, November 19, 1977 Through February 12, 1978*. New York.

Winter T. This volume. The Glass Finds from the Ḥora Monastery.

Woolley C.L. and Lawrence T.E. 1914. *The Wilderness of Zin*. London.