'Atiqot 91, 2018

A Byzantine Settlement on the Northernmost *Kurkar* Ridge of Ashqelon, Barne'a B–C Neighborhood

Ianir Milevski, Gabriela Bijovsky, Debora Sandhaus, Alexander Krokhmalnik and Yael Gorin-Rosen[1]

Introduction

During November–December 2003, a salvage excavation was conducted prior to the construction of Compound 6 in the new neighborhood of Barne'a B and C, the northernmost part of present-day Ashqelon (Milevski and Krokhmalnik 2010; map ref. 159250–700/622700–800; Fig. 1).[2]

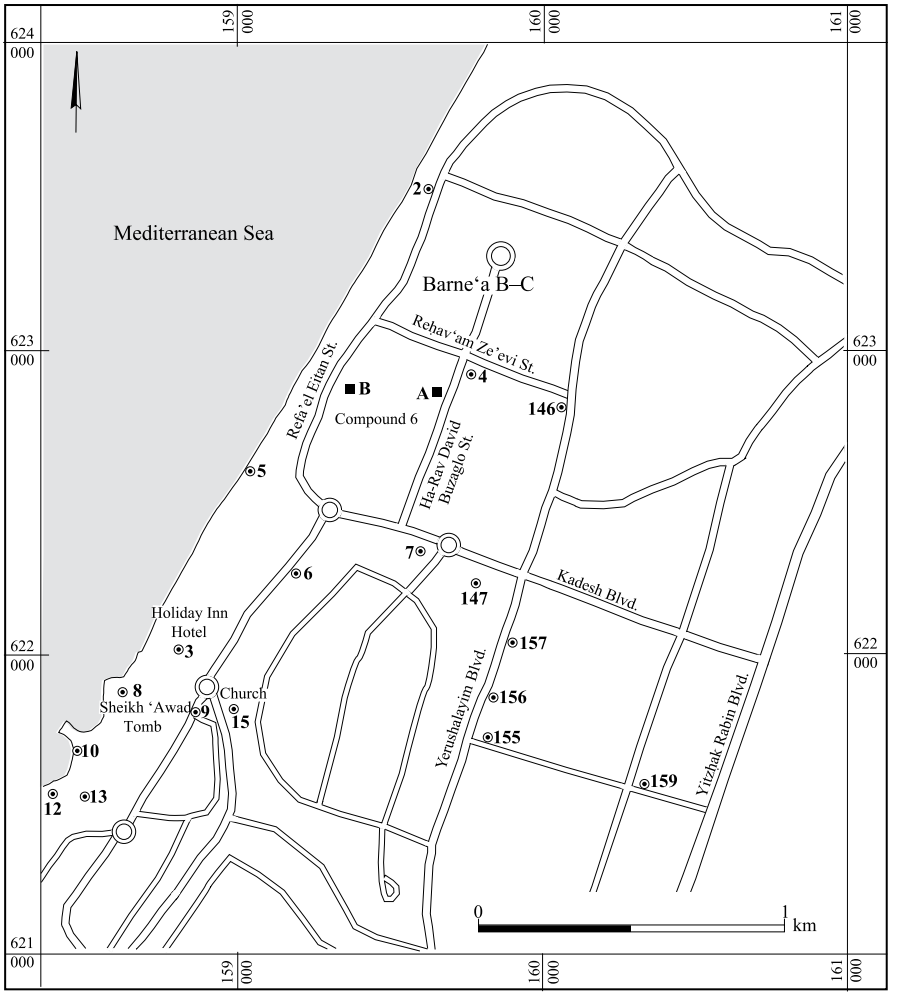

Fig. 1. Location map of Ashqelon Barne'a B–C (Site nos. follow Berman and Barda 2005).

Forty years ago, large-scale earthmoving activities in this region were carried out when roadways were built near the beach. During 2003, prior to commencing work on the new neighborhood, inspectors of the Israel Antiquities Authority (hereafter, IAA) discovered ancient remains among the sand dunes which cover the first *kurkar* ridge, hundreds of meters from the Mediterranean shore. These excavations, positioned on the western slope of the first *kurkar* ridge, revealed remains from the Byzantine period—mainly sixth century–first half of the seventh century CE (Area A)—and two cist tombs (Area B), one of which dated from the Roman period (late first–third centuries CE), and the second unexcavated. Surface loci in the squares surrounding the tombs yielded material dated to the sixth–seventh centuries CE.

Prior to the present excavation, remains from the Byzantine period were found both around Tel Ashqelon (Stager 1993:111–112) and in abundance in the Barneʿa area, including three churches (Tzaferis 1971) and remains of other buildings (Vitto, forthcoming). A comprehensive maritime survey along the coast of Ashqelon (Galili, Sharvit and Dahari 2001) discovered several other remains from this period. Surveys conducted by Berman and Barda (2005:21*–29*, 66*–69*) in the area of Barneʿa and Afridar during the 1970s and 1990s revealed previously documented antiquities in the area, as well as new sites, some of which were later excavated (e.g., Vitto, forthcoming). The features described in the surveys include remains of a church (Fig. 1: Site 15), a mosaic floor (Fig. 1: Site 6), tombs built of *kurkar* stones (some with human bones; Fig. 1: Sites 2, 7, 12), installations (Fig. 1: Site 4) and other structures (Fig. 1: Sites 3, 159). Pottery sherds of the Late Roman, Byzantine and Islamic periods were also found (Fig. 1: Sites 4, 9, 12, 13, 146, 147, 155–157).

Byzantine remains were also found in Areas C and E of a large, primarily Early Bronze Age excavation in the same neighborhood of Barneʿa B–C, some 150 m to the northeast (Golani 2005; 2007; 2008).[3]

THE EXCAVATION

The excavation was conducted in two locations (Areas A and B; Fig. 1), chosen based on the surface remains visible prior to construction work. Area B is approximately 200 m from the seashore, and Area A is located approximately 250 m east of Area B. Each area has its own 5 × 5 m grid system, comprising 4 × 4 m squares with baulks of 1 m. Occasionally, dry sifting (5 mm mesh) was conducted in loci considered to be living surfaces and within the tombs. Appendix 1 presents the list of loci and their stratigraphy.

Area A (Plan 1)

Area A is located on top of the first *kurkar* ridge, c. 35 m asl. Remains of walls and several associated rooms were found in seven excavation squares (c. 150 sq m, depth c. 0.5 m). In addition, a probable cistern (Cistern H) and attached installations were found approximately in the center of the area. Three phases of occupation were discerned.

Phase 3

This is the earliest structural phase in the area. The orientation of the structures is almost north–south. In the northern part of the area, the corner of Room A (Sqs J/K–7/6; c. 4.0 × 2.5 m; Fig. 2) is defined by two walls: W107 to the north and W108 to the east (Plan 1: Section 4–4). These perpendicular walls are c. 0.6 m wide and built of small *kurkar* stones. They are preserved to a height of a single course (c. 0.2 m), and are probably the foundation course. No floor was identified; instead, there was a sand fill (L11) dug down to the level of the walls' base. Several pottery sherds dated to the Byzantine period were found in L11. To the north of W107 was a fill (L10). A foundation trench was found under W107, partially excavated as L10 (Fig. 3) and yielded restorable pottery dated to the sixth century CE (Fig. 13; see below).

To the southeast, c. 5 m from Room A, another room (Room B) was found built in a

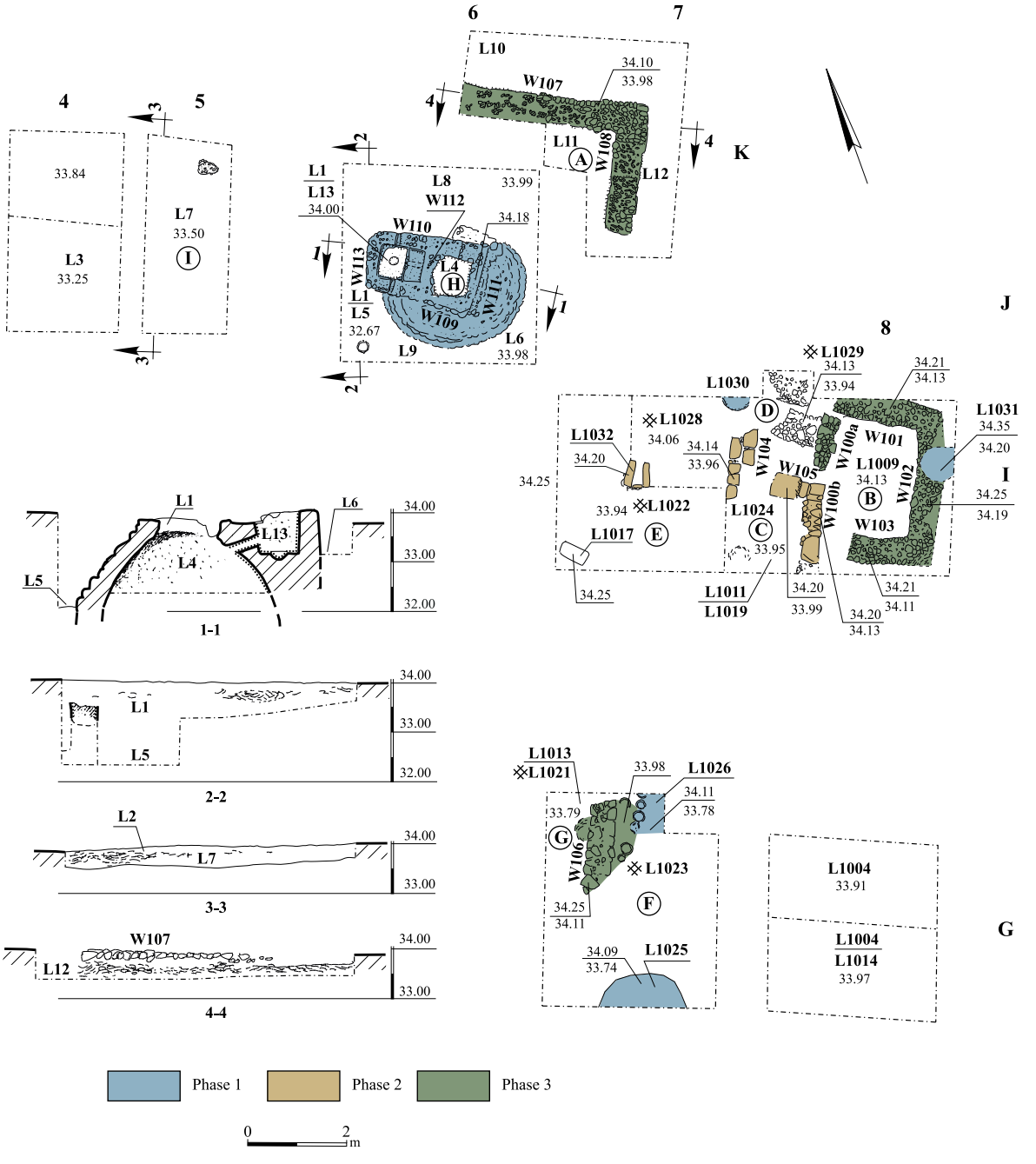

Plan 1. Area A, plan and sections.

similar technique. Room B (Sq I8; c. 3.5 × 2.5 m; Fig. 4) is enclosed by four walls (W100–103) with an average width of 0.5 m, preserved one course high (0.1–0.2 m). As in Room A, the extant remains are considered to be the foundations of the walls. A sand fill (L1009) probably represents the fill under the floor of Room B.

Fig. 2. Area A, Room A, looking southeast.

Fig. 3. Area A, W107 and foundation trench with pottery, looking southwest.

Room B was entered from the west through an opening in W100. North of the entrance, W100a was built using small and medium stones; it belongs to Phase 3. The southern segment (W100b) was built of medium-sized flat *kurkar* stones, and seems to be later (Phase 2) than the northern section (see below).

Aside from glass fragments of bowls, bottles, and lamps found in L1009 and the fill above (L1003, L1008), which are dated to the Late Roman–early Byzantine period (see below), all finds dated to the Byzantine period. This includes a hoard of seven gold coins found in L1009, near W102 (see *The Coins*, below). It was not clear whether the hoard was buried under the floor (dug from above) or was part of the fill beneath the floor. The *terminus post quem* for Room B can be ascribed to the third quarter of the sixth century CE according to the dating of the hoard.

Southwest of Room B (Sq G7), a two-meter-long segment of a wall made of small *kurkar* stones (W106) was discovered (Fig. 5). Wall 106 was preserved to a height of one course (c. 2.00 × 0.60 × 0.14 m). Its construction style is similar to that of the walls of Rooms A and B, and for this reason, it is attributed to Phase 3. Human bones of an infant were found in the fill above W106 (L1013, L1015), but it seems that they are not in context.[4] Flanking W106 are floors, which were labeled Room F (L1020/1023) to the east, and Room G (L1021), to the west (Fig. 5). In Room F, several restorable storage jars and basins dated to the sixth century CE were found *in situ* on the floor (Fig. 11:2, 5), possibly indicating that this room was utilized for storage. Glass fragments from a bottle dated to the Byzantine period were also found. Restorable pottery of the same date also came to light on the floor (L1021) of Room G (Fig. 11:1, 3, 4). Two metal tools were found in Rooms F and G (L1013; Fig. 19:3, 4; see Table 6).

In the northwestern corner of the excavation, Open Area I (Sqs J4–5) yielded restorable pottery (L7; Fig. 12), mainly cooking ware

Fig. 4. Area A, Room B, looking east.

Fig. 5. Area A, Rooms F and G, looking southwest.

and bowls dated to the sixth century CE. Open Area I is tentatively associated with Phase 3 according to the pottery and its similarity to the fills of the other squares.

Phase 2

Phase 2 is an enlargement of the structures associated with Phase 3, mainly to the west of Room B. Room D (2 × 2 m; Sq I8) exhibits

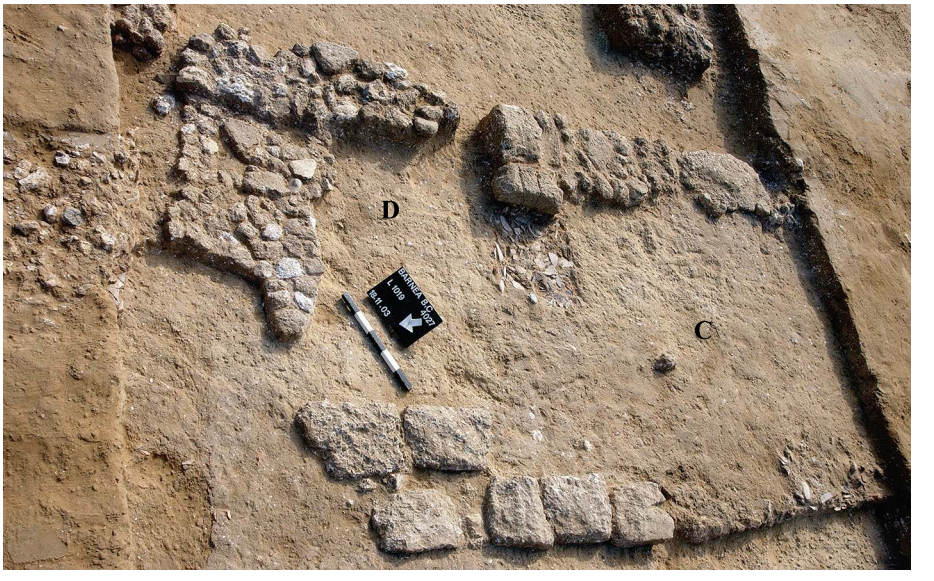

Fig. 6. Area A, Rooms C and D, looking east.

Fig. 7. Area A, L1024, foundation trench of W105, looking east.

a paved floor made of small *kurkar* stones (L1029) joining W100 on the west (Fig. 6). A second wall (W105) abuts W100b, and divides the area into two: Room D in the north and Room C (c. 2 × 2 m) in the south. Pottery sherds and glass fragments dated to the Byzantine and the Early Islamic periods were encountered, as well as dispersed human bones of an infant. It is not clear if the courtyard to the west (Courtyard E) and Rooms C and D existed during the earlier phase.

Walls 105, 100b and a wall running north–south (W104) were built later than Phase 3. Wall 105 was dismantled in order to check its exact stratigraphical relation with W100. Wall 105's foundation trench (L1024; Fig. 7) yielded

Fig. 8. Area A, Courtyard E with installation L1032, looking southwest.

Fig. 9. Area A, Cistern H, looking east.

restorable pottery sherds (Fig. 14) dating from the late fifth to the end of the sixth–seventh centuries CE and glass fragments (see *The Glass Vessels*, below).

Courtyard E (Sq I7; Fig. 8) is located to the west of Rooms D and C and separated from them by W104. A U-shaped installation (L1032) made of dressed *kurkar* stones was found in the center of the courtyard. In the northeastern quarter of Sq I7, a tiny layer of a plaster floor was found (L1028). A beaten-earth floor (L1022) was in the remainder of the square. These two surfaces probably represent two superimposed floors. In the southwestern corner, a grinding stone (not illustrated) was found in the fill above Floor 1022 (L1017), as were glass fragments dated to the Late Roman and Byzantine periods, including a rim of a bowl with an applied trail (Fig. 16:1). A few human bones were also found in this phase, probably not in context.[5]

Phase 1

This is the latest phase in the area. We cautiously include in this phase all the topsoil loci, Cistern H, and a series of pits filled with sand, which appear in several squares.

Upon removal of the topsoil layer (upper part of L1; Sq J6), the entrance to a cistern (H) was exposed (Plan 1: Sections 1–1, 2–2; Fig. 9). Cistern H has a vaulted superstructure (L4) constructed of small *kurkar* stones, with an attached installation (L13) to provide easy access to the water. The cistern was partially excavated to a depth of 1.5 m. A few pottery sherds (n = 4) and a glass fragment dated to the Late Roman period were retrieved from the vaulted structure (L4). One of the pottery sherds belongs to a jar from the Byzantine period (similar to Fig. 14:5), one is a Gaza Ware handle dated to the Ottoman period, and two are undatable handle fragments. Based on these sherds, the fact that Cistern H cuts Room A of Phase 3 to the south, and the layer of pottery sherds in the lower part of L1, we tentatively date the cistern to a later phase. As the cistern was not fully excavated and it is difficult to date an open archaeological feature with too few sherds, the date of its use remains unclear (for a discussion on dating wells and cisterns, see Carmi et al. 2008).

Several pits were found in the topsoil, cutting the structures of Phases 2 and 3. We present these pits together, although they are not dated (only undatable glass fragments were encountered within them) and there is no proof that they were dug in the same period. In Sq I8, a circular pit (L1031; diam. 0.5, 0.15 m deep) cut W102 in the north. Unfortunately, this pit was discerned only after the topsoil was excavated and the top of W102 was cleaned. In the baulk between Sqs I7 and I8, another circular pit (L1030; diam. 0.45, 0.3 m deep) was found, cutting Courtyard E in the north. Two pits were also found in Sq G7, one in the northern (L1026) and one in the southern (L1025) part of the square, cutting L1020/1023. These pits are also circular (diam. c. 1 m, c. 0.35 m deep). The northern pit contained some undatable glass fragments.

Area B (Plan 2)

Area B is located on a relatively lower part of the eastern slope of the *kurkar* ridge (c. 20 m asl). Area B comprises five squares (Plan 2); in total, c. 100 sq m were excavated (five squares and the removal of baulks). Only Sq E6 was excavated beyond the topsoil to a depth of 0.3 m.

Two cist tombs were revealed, both built of *kurkar* slabs (0.5 × 0.3 m on average; Fig. 10), and both oriented northeast–southwest.

Fig. 10. Area B, Tombs 1 and 2, looking southwest.

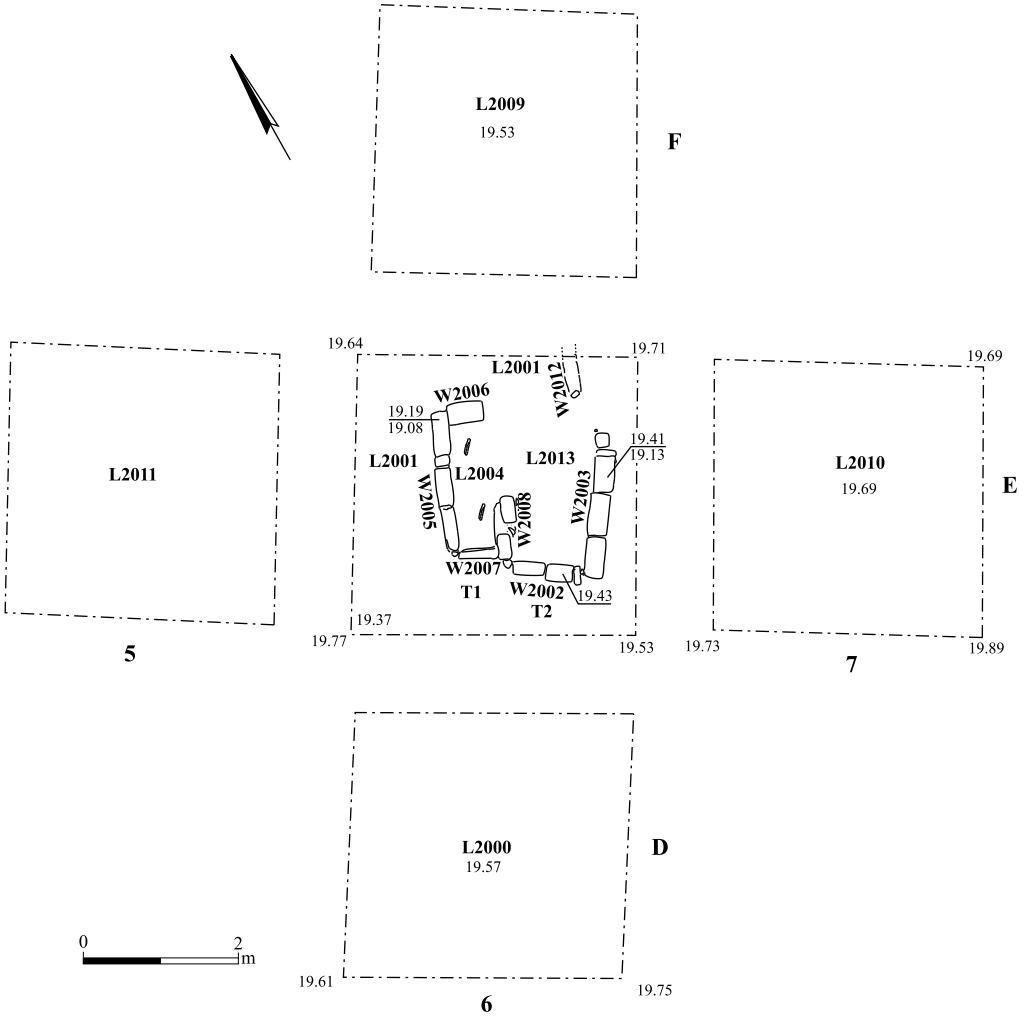

Plan 2. Area B.

Tomb 1 (L2004; 1.80 × 0.75 m) to the west was partially excavated. A few human long bone fragments from a juvenile or adult were found, together with some pottery sherds and a glass candlestick bottle (Fig. 16:4) dated to the Roman period. Tomb 2 (L2013; at least 1.80 × 1.25 m) was unfortunately not excavated. The topsoil above and around the tombs (L2000, L2001, L2009–2011) yielded pottery dated to the late sixth–seventh centuries CE (Fig. 15), as well as a terracotta figurine (Fig. 19:1) dated to the Persian period.

THE POTTERY

The pottery chosen for illustration was retrieved from significant loci. The vessels are arranged in the plates (Figs. 11–15) as distinct assemblages. Following a brief description of the selected assemblages and their findspots, pottery analogies were selected from well-dated assemblages near Ashqelon, and established typologies are discussed. Additional references were chosen that include a detailed discussion.

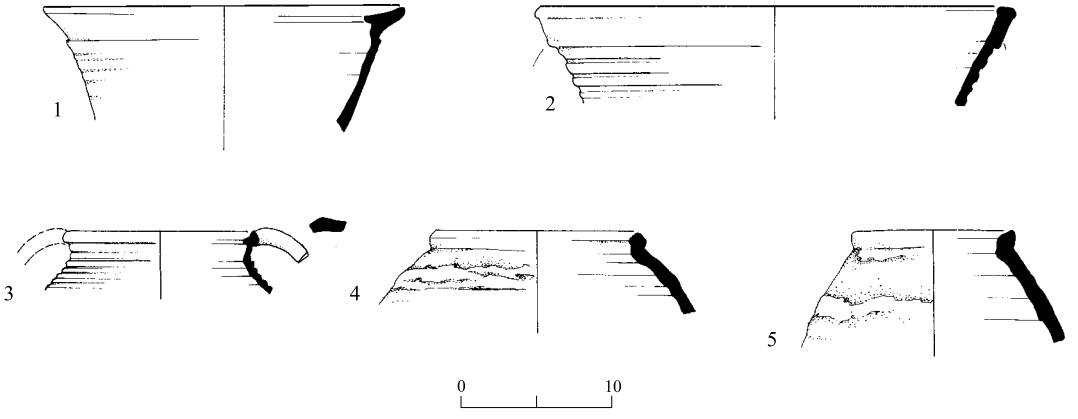

Fig. 11. Pottery from Area A, Phase 3, Rooms F and G—L1020, L1021, L1023.

No.	Vessel Type	Locus No.	Basket No.	Description
1	Basin	1021	10061/1	Reddish yellow clay
2	Basin	1023	10056	Reddish yellow clay
3	Cooking pot	1021	10061/2	
4	Storage jar	1021	10061/3	Reddish yellow clay
5	Storage jar	1020	10019	Reddish yellow clay

Selected Assemblages

Phase 3, Area A, Rooms F and G—L1020, L1021, L1023 (Fig. 11).— The pottery in Fig. 11 represents the assemblage found in the accumulation layer above the floor and the floor in Rooms F and G (Sq G7). The pottery of both rooms is presented together since there is no chronological or typological difference between the features. The assemblage dates to the sixth century CE.

Phase 3, Area A, Open Area I—L7 (Fig. 12).— The pottery assemblage uncovered in L7 (Sq J5) was characterized by restorable pottery. Among the non-illustrated pottery were many sherds of Late Roman C bowls and Gaza storage jars. The assemblage dates to the sixth century CE.

Phase 3, Area A, near Room A—L10 (Fig. 13).— The pottery assemblage collected in this locus represents a fill north of W107 dug down to the wall's base. Although no floor was identified, this locus is presented because it yielded restorable pottery. The assemblage dates to the sixth century CE.

Phase 2, Area A, Rooms C and D—L1024 (Fig. 14).— The pottery from this locus originated in the foundation trench of W105. The foundation trench should be dated to the late sixth or seventh century CE.

Area B—L2001 (Fig. 15).— This locus represents a fill located around Tombs 1 and 2. The pottery of this assemblage seems to be later than the others, probably dated to the late fifth or first half of the sixth century CE.

Typology

Bowls

Fine Byzantine Ware Bowls (Fig. 12:2).— This type of bowl is red-slipped, with a ledge rim. It belongs to Fine Byzantine Ware Form 2C, dated from the end of the Byzantine to the beginning

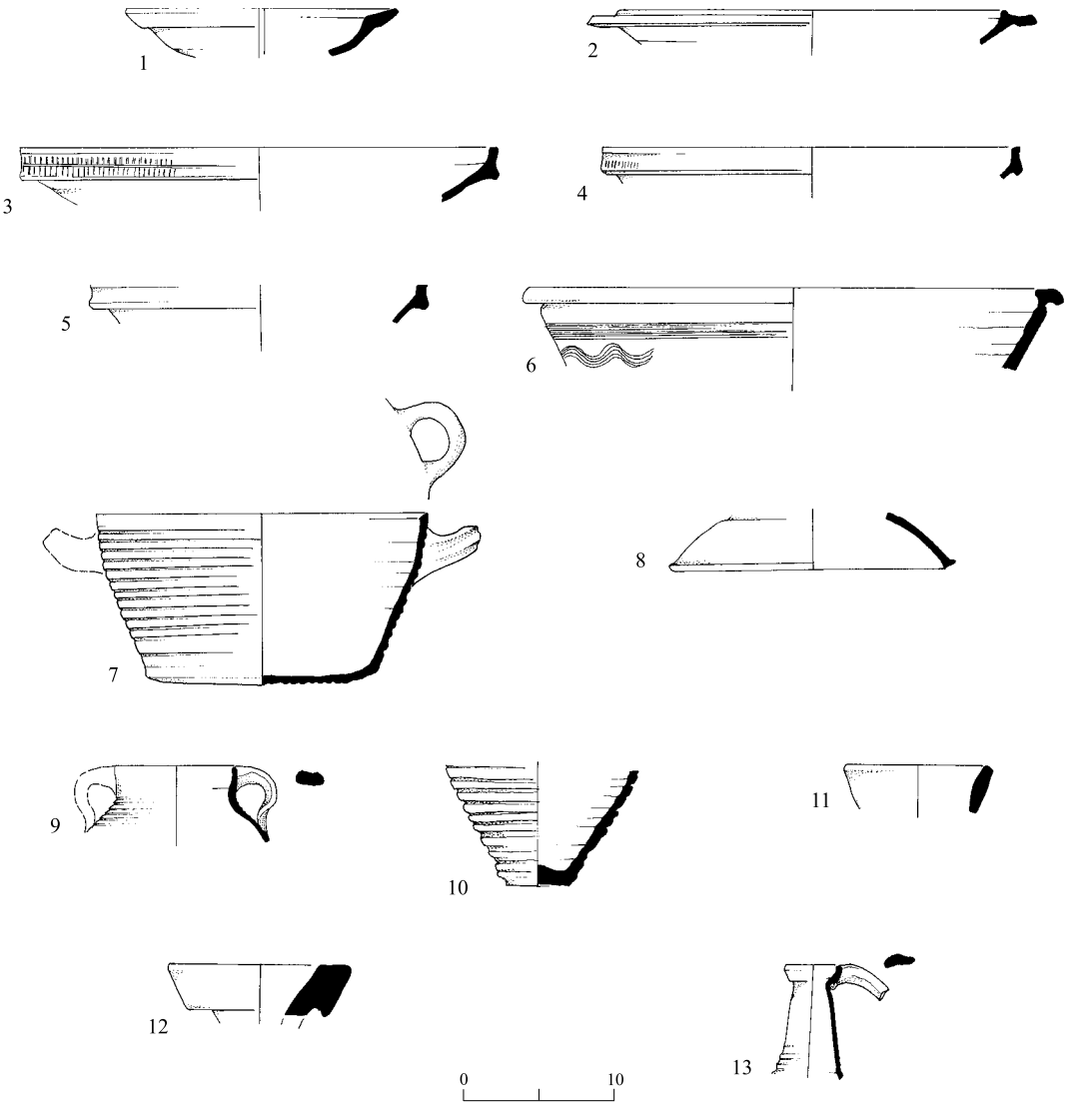

Fig. 12. Pottery from Area A, Phase 3, Open Area I—L7.

No.	Vessel Type	Basket No.	Description
1	Bowl	114/1	Reddish yellow clay
2	Bowl	114/4	
3	Bowl	114/2	
4	Bowl	109/1	
5	Bowl	114/3	
6	Basin	119/1	
7	Casserole	109/4	

No.	Vessel Type	Basket No.	Description
8	Casserole lid	109/3	
9	Cooking pot	109/2	
10	Storage jar	109/6	Reddish yellow clay
11	Storage jar	119/2	
12	Amphora	109/5	
13	Jug	109/7	

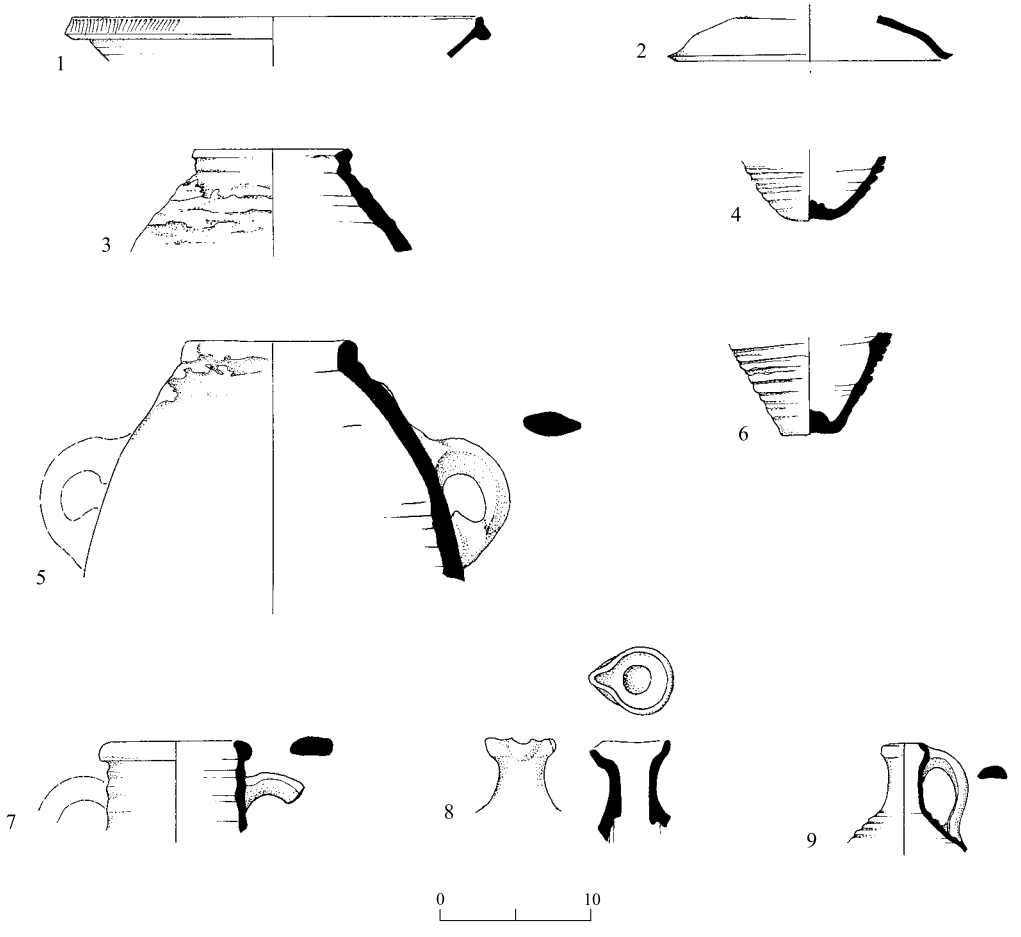

Fig. 13. Pottery from Area A, Phase 3, near Room A—L10.

No.	Vessel Type	Basket No.	Description
1	Bowl	119/1	Reddish yellow clay
2	Casserole lid	119/2	
3	Storage jar	119/3	Reddish yellow clay
4	Storage jar	119/4	Reddish yellow clay
5	Storage jar	119/5	Reddish yellow clay
6	Storage jar	119/6	Reddish yellow clay
7	Amphora	119/7	
8	Jug	119/8	
9	Jug	119/9	

of the Umayyad period (Magness 1993:198–200). Analogies to this type have been found in Ashqelon, in a rubbish accumulation of pottery dated to the sixth–seventh centuries CE (Nahshoni 1999:109; Fig. 5:2) and from another assemblage dated to the sixth–seventh centuries CE (Brand 2001:205, Pl. 1).

Late Roman Slip Ware Bowls (Figs. 12:3–5; 13:1; 14:1, 2; 15:1, 2).— Most of the red-slipped

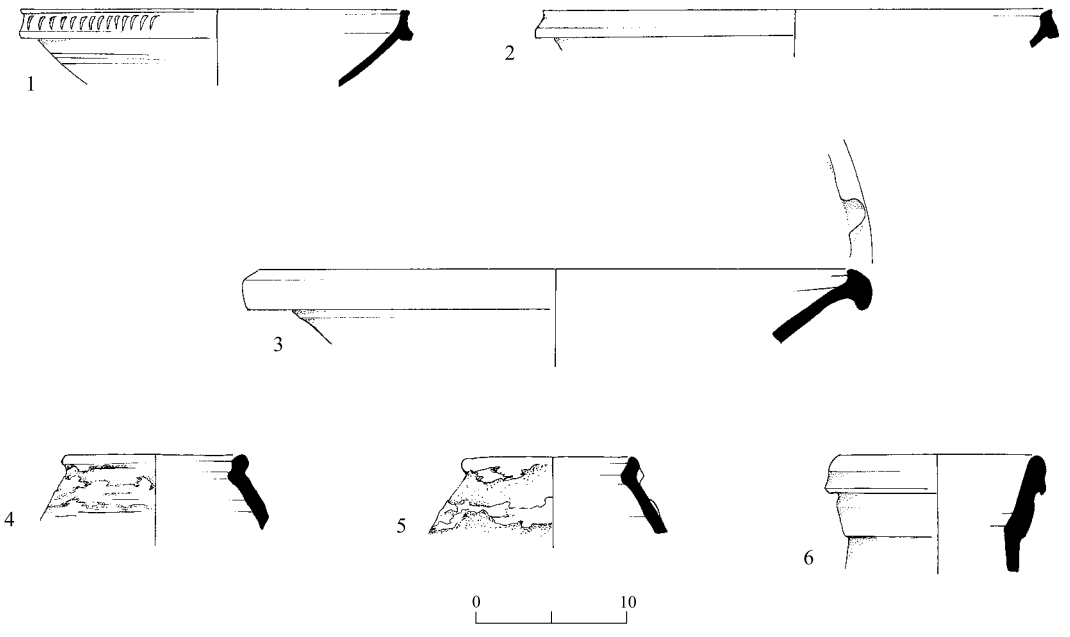

Fig. 14. Pottery from Area A, Phase 2, Rooms C and D—L1024.

No.	Vessel Type	Basket No.	Description
1	Bowl	10058/1	
2	Bowl	10062/1	
3	Basin	10058/2	Reddish brown clay with white and mica inclusions
4	Storage jar	10058/3	Reddish yellow clay
5	Storage jar	10058/4	Reddish yellow clay
6	Amphora	10062/3	

bowls found at the site correspond to Hayes Late Roman C Ware, Form 3. These are deep bowls or plates with a vertical thickened rim and an overhang at the bottom, flaring, curved, slightly angled or almost straight walls, and a low or false foot. They are known to bear an elaborate stamp decoration on their floor (Hayes 1972:337). The Barne'a B–C assemblage includes bowls corresponding to Form 3B (Figs. 12:3–5; 15:1). Other bowls bear a rouletting decoration on the rim, dated to the mid-fifth century CE (Fig. 14:1, 2; Hayes 1972:337, Form 3F). Analogies to these types can be found at every Byzantine site. In Ashqelon, they appear in two assemblages dated to the sixth–seventh centuries CE (Nahshoni 1999:109*, Fig. 5:7; Brand 2001: Pls. 13, 14).

A sherd of a deep bowl with a knobbed, broad, short rim, flattened on top and chamfered on the underside, was also found (Fig. 15:2). It belongs to Late Roman C Form 6, and is dated to the early sixth century CE (Hayes 1972:341, Fig. 70). Two decorated crosses on the bases of Late Roman C red-slipped bowls were uncovered in the topsoil (L2; not illustrated).

Basins

The most common basin in the corpus has an arched rim (Fig. 12:6). There is a band of

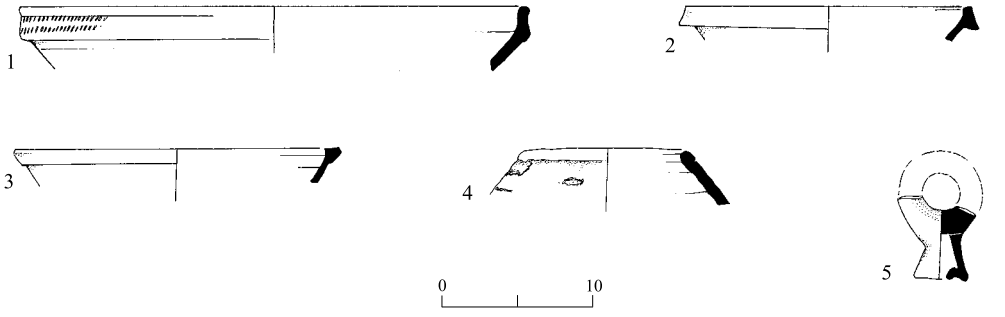

Fig. 15. Pottery from Area B—L2001.

No.	Vessel Type	Basket No.	Description
1	Bowl	20001/1	Reddish yellow clay, yellowish red slip
2	Bowl	20001/2	Reddish yellow clay, yellowish red slip
3	Storage jar	20001	
4	Storage jar	20001/3	Reddish yellow clay
5	Lantern	20001/4	Reddish yellow clay

incised lines with another wavy incised band decorating its walls. They are well-known in Ashqelon's sixth–seventh century CE assemblages (Nahshoni 1999:109*, Fig. 4:12). According to Nahshoni (1999:103*), this type combines features from kraters typical of the Jerusalem region and those found at southern sites (Magness 1987:216–224). Similar basins have been recorded in the Jewish Quarter excavations in Jerusalem, dated between the sixth and the late seventh–early eighth centuries CE (Form 2A; Magness 1993:206, 207; 2003:427, Pl. 18:13).

A second type of deep basin common in Barne'a's repertoire is characterized by almost straight walls, with a flange ending in an infolded rim (Fig. 11:1). At least one complete basin was found and partially restored. This type is also sometimes defined as a bowl, and seems to be common in assemblages from Ashqelon dated to the sixth–seventh centuries CE (Nahshoni 1999:109, Figs. 4:8, 5:8; Brand 2001: Pl. 2:3).

Several fragments of an uncommonly large basin of reddish brown clay, with gray and mica grits with angular walls and a broad, almond-shaped rim was found in Room B (Fig. 14:3). A similar vessel was found in Be'er Sheva', Ramot Nof, dated to the Byzantine period (Ustinova and Nahshoni 1994:163, Fig. 3.5). Another basin of the same ware with a different rim was found in Ashqelon in a Byzantine refuse pit (Nahshoni 2007: Fig. 14:10).

Lastly, a fragment of a local coarse basin with ridged walls and an out-folded rim was also found (Fig. 11:2). It seems to be a local type, since its production and quality resemble Gaza Ware storage jars. Analogies are absent, though its context and similarity to the aforementioned vessels might suggest a date in the late fifth–sixth centuries CE.

Cooking Ware

A small amount of cooking ware was found at the site. It includes an open ribbed casserole with two horizontal handles (Fig. 12:7) and ribbing on rounded or angular walls starting on the upper part of the vessels and two casserole lids (Figs. 12:8; 13:2). All of them are common during the Byzantine period.

Closed cooking pots are scant and include a ribbed cooking pot with a knobbed holding

rim and inner groove to set a lid, a wide neck, and two loop handles attached from rim to shoulder (Fig. 11:3). Analogies to this cooking pot can be found at Ashqelon in contexts dated to the sixth–seventh centuries CE (Nahshoni 1999:109, Fig. 5:11; Brand 2001: Pl. 1:8). Sherds of a small, ribbed cooking pot, with a tall neck ending in a simple rim and two loop handles attached from rim to shoulder, are a common find in the Byzantine period (Fig. 12:9).

Storage Jars

Local storage jars are the most common vessels in the repertoire and it seems that at least one of the rooms (most likely Room B) served as a storeroom. As expected, the most frequent type found are Gaza storage jars (Figs. 11:4, 5; 12:10; 13:3–6; 14:4, 5; 15:3, 4), although there are also a few sherds of a different kind of storage jar with a simple rim (Fig. 12:11).

The Gaza storage jars are holemouth jars with an elongated body. The rim is rounded and slightly inverted, and the base is usually pointed or flattened. Clay accretions are common on the rim, neck and shoulder, sometimes also appearing on the base. Jars of this family have been found throughout the Mediterranean Basin, dating from the first to the seventh centuries CE (Majcherek 1995:165). Majcherek proposed a typological system based on chronological criteria, in which cylindrical jars are the earliest, and elongated jars, divided into three subtypes, are dated from the fourth to the beginning of the seventh centuries CE. According to Majcherek, the inclination of the shoulders changes from almost flat to steep, and the band of ridging descends as a consequence of this modification (Majcherek 1995:166). Lately, a new typology was suggested by Oked (2001:227–250), dividing the type into seven forms.

At first, Egypt was mistakenly proposed as the production center. Later, a southern Palestinian origin, as suggested by Riley (1979) and Majcherek (1995:165), was substantiated when pottery workshops were discovered in the Ashqelon–Gaza region (Israel 2001:223, Nos. 100–103) and at Ashdod (Baumgarten 2000:69*–74*).

At Barne'a, several sherds of Gaza storage jars were found corresponding to the late subtypes (Figs. 11:4, 5; 12:10; 13:3; 14:4, 5; 15:4). These feature a pointed base, an elongated cylindrical body on the upper part, cone-shaped on the lower part, two small loop handles attached to plain shoulders and a straight or slightly in-turned, sometimes concave rim that corresponds to Oked Type 6 and Majcherek Form 3 (Oked 2001:233, Pl. 1; Majcherek 1995:168–169, Pls. 3:3, 6). The suggested date for this subtype is the end of the fifth century CE, and the apogee of its distribution and production period is in the sixth century CE (Oked 2001:237; Majcherek 1995:168).

The second type in Barne'a's repertoire (Figs. 13:4; 15:3) has a pointed base, a cylindrical body, a plain shoulder and a simple rim. It corresponds to Oked Type 7 and Majcherek Form 4 (Oked 2001:233, Pl. 1: Type 7; Majcherek 1995:169: Pls. 3:4; 4). The production and distribution of this subtype suggest a date in the late sixth century CE for its earliest appearance, overlapping with the earlier Form 3. This form is the most common one during the seventh century CE. The final date of its production is still under study (Majcherek 1995:169).

The sherds of another local storage jar characterized by a simple outward rim were found as well. The sherds are too small to be identified, though similar profiles were registered in Ashqelon from a debris accumulation of pottery dated to the sixth–seventh centuries CE (Nahshoni 1999:109, Fig. 5:2).

Imported Amphorae

Imported amphorae are present in the Barne'a repertoire as well. Two of them (Figs. 12:12; 14:6) correspond to Keay Type LXIIC–D/Beltràn Lloris Type 59 (Keay 1984:309, Figs. 145, 146; Beltràn Lloris 1970: Fig. 231.2). These are amphorae with an everted profile, a sometimes triangular rim, and a clear groove running

around the inside of the rim. These correspond to Keay's LXIIC-D variation (Keay 1984: Figs. 145, 146), or sometimes with a squared profile rim (Fig. 12:12) corresponding to Keay's LXIIE (Keay 1984: Fig. 147:7). According to Keay, the fabric and surface treatment suggest a Tunisian origin. They seem to have been first produced during the second quarter of the fifth century CE, and their introduction to other markets occurred during the third quarter of the fifth century CE. The type was produced and exported from Tunisia until the mid-sixth century CE (Keay 1984:350).

Another imported amphora is represented by a sherd with a tall, slightly ribbed neck, a thickened rim with a round profile, and two handles attached from neck to shoulders (Fig. 13:7). It seems to belong to Keay Type LIIIC, dated between the fifth and seventh centuries CE (Keay 1984:281, Figs. 118–120). A petrologic analysis seems to indicate its production in Cyprus or Syria (Williams 1979:177), and it presumably carried oil (Keay 1984:271).

Jugs and Juglets

The repertoire includes a few sherds of jugs and juglets. The upper part of a cooking-ware trefoil-rim jug (Fig. 13:8) is comparable to a jug from Ashqelon dated to the late Roman period based on its general form (Nahshoni 2007:89–90, Fig. 13:2). To the best of our knowledge, trefoil jugs might also continue into the Byzantine period (Magness 1993:242–243).

A second type of jug has a conical neck and a cup-shaped mouth rim, a handle attached to the rim, and ribbing starting from the lower neck (Fig. 12:13). Analogies to this jug are found in the Ramot Nof Byzantine context (Ustinova and Nahshoni 1994: Fig. 5:2) and in a refuse pit in Ashqelon dated to the sixth–seventh centuries CE (Brand 2001: Pl. 2:11).

A third type of jug with a ribbed body, a long neck ending with an incurved rim, and a handle attached from rim to shoulder appears among the pottery finds (Fig. 13:9). No analogies were found to this type, but the general form and context suggest a Byzantine-period date.

Lantern

A single sherd of the upper ring of a lantern was identified in the area of the tombs (Fig. 15:5). Lanterns are common in the Byzantine and Umayyad periods. The sherd found at Ashqelon was made of orange clay, as is most of the Byzantine pottery. A similar sherd was found in a refuse pit in Ashqelon dated to the sixth–seventh centuries CE (Brand 2001: Pl. 2:13).

THE GLASS VESSELS

The glass finds unearthed during the excavations were very fragmented and in poor condition. Only a few were drawn (Fig. 16) and catalogued; the rest were very small fragments of the most common Byzantine types. This report will focus on three fragments from Area A, one of which is unique (Fig. 16:3) and was the main trigger for this report. The only glass vessel from Area B is also presented below (Fig. 16:4), dated to the Roman period.

Area A

Glass remains were found in most of the excavated loci. Approximately three-quarters of the 240 glass fragments were unidentified body fragments. The small glass vessel fragments belonged mainly to common Byzantine types, known from other excavations in Ashqelon, like the Byzantine fill of the painted Roman tomb (Katsnelson 1999) and the Semadar Hotel (Katsnelson and Jackson-Tal 2004).

These Byzantine glass vessels include wineglasses, plain and rounded rims, as well as rims with horizontal applied trails, and feet with hollow ring bases (Katsnelson 1999:70*–71*, Fig. 2:9–11, 14). There were also bottles with concave bases or with applied horizontal turquoise trails around the neck (Katsnelson 1999: Fig. 4:4, 15–17). Two oil lamps with hollow conical stems were found, similar to those from the Byzantine fill of the painted tomb (Katsnelson 1999:79*–80*, Fig. 5:5) and those in the baptismal font at Nir Gallim (Gorin-Rosen 2002:122–123, Fig. 2:3, 4).

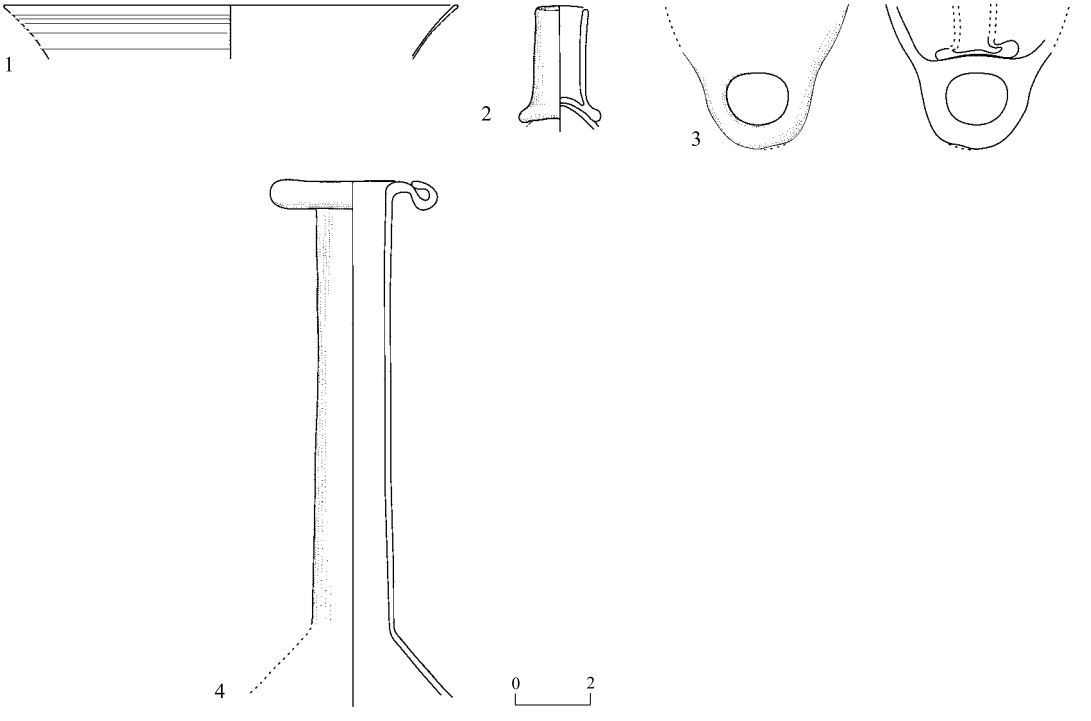

Fig. 16. Glass vessels from the excavation.

No.	Vessel Type	Area	Locus	Context/Feature	Reg. No.	Description
1	Bowl	A	1019	Fill under topsoil in Rooms C and D	10047	Small rim fragment; very light green with turquoise trails; sand deposits; very thin wall; flaring rounded rim decorated with 8 wound trails; rim diam. 12 cm
2	Oil lamp with wick tube	A	9	Fill outside Cistern H	112	Complete wick tube; greenish glass covered with iridescence, severe pitting and sand deposits; very bubbly glass with large, elongated bubbles and black impurities; edge of wick tube rounded by fire; cylindrical tube attached to the bottom of the vessel
3	Oil lamp with wick tube	A	9	Fill outside Cistern H	112	Fragment of the lower part of the vessel; greenish-blue glass; silver weathering, iridescence and sand deposits; very bubbly glass with big elongated and round bubbles; fragment of a thick handle-shaped bottom with a crude pontil scar; the bottom of this vessel includes remains of a wick tube inside, made of yellowish brown glass in contrast to the vessel's color
4	Candlestick bottle	B	2004	Tomb 1	20002	Almost complete rim and neck, with some fragments of the body and the bottom; light green glass covered with gold crust, iridescence and severe pitting; wide flaring infolded rim, hollow and uneven; long cylindrical neck with sloping shoulder; rather thick wall; rim diam. 4 cm; estimated height 15–17 cm

Others were small fragments of rims or handles from various bottles, jugs, or cosmetic vessels. In addition to these vessels, three fragments were chosen for further study.

Bowl with Multiple Wound Trails On and Below the Rim.— Figure 16:1 is a bowl characterized by a flaring rim decorated with applied horizontal trails of a darker color. Bowls of this type were found at the Semadar Hotel, Ashqelon (Katsnelson and Jackson-Tal 2004:100–102, Fig. 1:5, 6). A few bowls of this type were also found at Khirbat el-Ni'ana with remains of a local glass production dated to the Late Roman–early Byzantine periods (Gorin-Rosen and Katsnelson 2007:84, Fig. 5:1–3, and see further references therein).

Oil Lamps with Wick Tubes.— One complete wick tube of a very common type (Fig. 16:2) was found together with a very unusual glass fragment (Fig. 16:3) including the remains of a wick tube inside.

Figure 16:2 has many parallels from the region and from most of the Byzantine sites in Israel and neighboring countries, including Ashqelon (Katsneslon 1999:78*, Fig. 5:4; Katsnelson and Jackson-Tal 2004:107, Fig. 3:5) and the baptismal font at Nir Gallim, north of Ashqelon (Gorin-Rosen 2002:123–124, Fig. 5, with further references therein).

Figure 16:3 is unique. It has a thick handle-shaped bottom with a crude pontil scar. The irregular shape with the wick tube may point to a very unusual vessel, probably used as an oil lamp. The fragment presents the lower part of the vessel; however, it cannot stand on its bottom and we may assume that this vessel was set inside a metal holder or was suspended. To the authors' knowledge, there is no close parallel published for this shape. Worth noting is a fragment of a unique oil lamp, without provenance, in the Eretz-Israel Museum collection (MHG 1271; Lehrer 1972:67, 68, Figs. 7–9). This fragment is the lower part of a lamp with a highly pushed-in tubular base, a wick tube in its center and four wick tubes arranged around it. On the underside of the center, there is an applied drop-shaped handle. Lehrer (1972:67) dates the vessel to the Early Islamic period.

Based on the common use of the Byzantine wick tube oil lamps, as well as the combination of a greenish blue vessel and a yellowish brown wick tube, also typical of this period, the vessel (Fig. 16:3) should be assigned to the late Byzantine period.

Area B

Candlestick Bottle.— The only glass vessel found in Area B (Fig. 16:4) is a candlestick type bottle from a cist burial (Tomb 1). It is the earliest glass vessel found in these excavations. Its upper part was preserved, although the body and bottom broke into very small fragments. This bottle has a wide flaring infolded rim and a rather small triangular body. Candlestick-type bottles were common in late first to mid-third centuries CE throughout the Roman Empire (Barag 1970:209–212, Fig. 46, Type 21), and Fig. 16:4 is similar to a rim found at 'Ein ez-Zeituna dated to the second century and the early third century CE (Winter 2006:81, Fig. 3:26).

THE COINS

A total of 47 coins were discovered (46 in Area A), 26 of which were unidentifiable. The finds include a hoard of seven gold coins dated to the reign of Justinian I (Fig. 17), which will be briefly described here (Bijovsky, Milevski and Sandhaus 2014). The isolated coins are all bronze, dated to the Byzantine period (fifth–seventh centuries CE; Table 1; Fig. 18).

The Gold Hoard

A hoard of seven gold coins was discovered in Area A (Fig. 17; Table 2), in the middle of Room B near W102. The coins of the hoard can be divided into two chronological groups: three *solidi* of the fourth century CE, dated to emperors Constantius II (355–361 CE; No. 1)

Table 1. List of Coins According to Loci

Locus	Description	Cat. No.
7	1 Unidentifiable	
8	1 *Minimi*, first half 5th c., possibly Carthage 1 Heraclius, *pentanummium*, Alexandria 1 Unidentifiable	11 20
1004	1 Possibly Leo I, *nummus* 1 Imitative issue, *pentanummium* 3 Unidentifiable	8 16
1005	1 Unidentifiable	
1006	Cast unstruck flan, *minimi*, 450–550 1 Imitative issue, *pentanummium* 1 Unidentifiable	13 18
1008	1 Unidentifiable	
1009 (Hoard)	1 Constantius II, *solidus* 2 Valentinian I, *solidus* 1 Anastasius I, *tremissis* 1 Justin I, *tremissis* 1 Justinian I, *semissis* 1 Justinian I, *tremissis*	1 2, 3 4 5 6 7
1010	1 Uncertain, *minimi*, second half 4th c. 4 Unidentifiable	10
1011	2 Unidentifiable	
1013	1 *Minimi*, first half 5th c. 1 Unidentifiable	12
1014	1 Zeno, *nummus* 1 Imitative issue, *pentanummium* 7 Unidentifiable	9 19
1019	1 Imitative issue, *pentanummium*	17
1020	1 Unidentifiable	
1022	1 Arab-Byzantine, *follis*, c. 640–660 1 Unidentifiable	21
Surface	1 Byzantine, *follis*, 518–538 1 *Pentanummium*, 522–537 1 Unidentifiable	14 15
No Locus	1 Unidentifiable	
Total: 47 coins		

and Valentinian I (364–367 CE; Nos. 2, 3); and Byzantine *semisses* and *tremisses*, struck by the three emperors of the first half of the sixth century: Anastasius I (491–518 CE; No. 4), Justin I (518–527 CE; No. 5) and Justinian I (527–565 CE; Nos. 6, 7). These last two coins provide the *terminus post quem* for the deposition of the hoard. The fourth century coins are very worn—indicating extensive circulation—while those added from the end of the fifth century–first half of the sixth century show minor signs of wear. In terms of mints and denominations, coins of the earlier group are all *solidi* from Antioch, while those of the later group are all fractions struck in Constantinople.

The same combination of Late Roman and Byzantine gold coins appears in other hoards in the region: 'En Gedi I, Deir Dassawi, Tell Nimrim and Ḥorbat Rimmon A and B (Table 3; Bijovsky, Milevski and Sandhaus 2014). In other words, the Barne'a B–C hoard is part of a local phenomenon in Byzantine Palestine.

The relatively large proportion of Late Roman gold coins of high intrinsic value in all the hoards indicates that they were still in circulation during the early sixth century in Palestine. *Solidi* of Valentinian I and Valens were struck in huge quantities and are known to be of pure quality. Between 366 and 369 CE, these two emperors introduced a new legislation against the devaluation of precious metal coinage and taxes being paid in underweight, impure, or false *solidi*. As a result of this effort, the *solidus* was stabilized with a high purity and weight (Hendy 1985:387–388; Noeske 2000:85).

The Isolated Coins

The fourteen identifiable isolated coins (Fig. 18; Tables 1, 4) are dated from the second half of the fifth century to the mid-seventh century CE. Although few in number, the coins show a repertoire typical of Ashqelon's region during the Byzantine period.

A number of *minimi* represent official and imitative issues of the fifth century: two *nummi*, whose attribution to emperors Leo I and Zeno is not completely certain (Nos. 8, 9), and three *minimi* depicting the image of 'Victory advancing left' (Nos. 10–12). Their identification as imitative issues is based on their crude style and fabric. These coins copied popular types of the second half of the fourth century that continued in circulation: SECVRITAS REIPVBLICAE (*LRBC* II:100,

Fig. 17. Hoard of seven gold coins.

Fig. 18. Isolated coins.

Nos. 2656, 2657), SALVS REIPVBLICAE (*LRBC* II:102, Nos. 2768–2771), and VICTORIA AVGG issues (*LRBC* II:63, No. 828). Therefore, the imitations are dated to the time of their prototypes, or shortly thereafter during the first half of the fifth century (Bijovsky 2000–2002:199–200). It is possible that Coin No. 10 is a SECVRITAS REIPVBLICAE coin (dated to 364–375 CE), but since it was struck on a very small flan, the reverse inscription is completely illegible. Many of the imitative issues are cast, such as Coin No. 13. Coin No. 11 is attributed to a Vandalic anonymous issue from Carthage.

Eight coins are dated to the Byzantine period (sixth–seventh centuries). The earliest is an illegible undated *follis* struck before 538 CE (No. 14). A group of five *pentanummi* of the Chi-Rho type constitutes the most noteworthy group among the isolated coins. Two main types of *pentanummi* were issued by this time: the Є 'epsilon' type and the ☧ Chi-Rho type (*MIBE*:98–99). All specimens of the present excavation belong to the Chi-Rho type (Nos. 15–19). Hahn dates the Chi-Rho type to the period from 522 to 537 CE, during Justin I's and the first decade of Justinian I's reign. Geographical distribution of this denomination shows that the Chi-Rho type was popular in the coastal area, especially in Ashqelon.[7] Almost every excavation of Byzantine material near

Table 2. Catalogue of the Hoard[i]

Cat. No.	Weight (g)	Diam. (mm)	Axis	Obverse	Reverse	Date Struck (CE)	Mint	References and Notes	IAA No.
LATE ROMAN **Constantius II (337–361 CE)—*Solidus***									
1	4.24	21	↑	DN CONSTAN TIVS PF AVG Bust r. pearled-diademed, cuirassed and draped	GLORIA REI PVBLICAE Rome and Constantinopolis seated facing holding between them a round shield: VOT/ XXXX. In exergue: ANTA	355–361	Antioch	*RIC* 8:526, No. 172	80727
Valentinian I (364–375 CE)—*Solidus*									
2	4.28	21	↘	DN VALENTINI ANVS PF AVG Bust r. pearls and rosette-diademed, cuirassed and draped. In r. field, graffito: XI	RESTITVTOR REIPVBLICAE Emperor stg. facing, holding standard and globe with victoriola. In l. field: ☧; in exergue: ANTA	364–367	Antioch	*RIC* 9:272, No. 2b (viii A), worn	80725
3	4.19	21	↓	Same. On face surface graffito: / \	Same. In exergue: •ANTH•	364–367	Antioch	*RIC* 9:272, No. 2b (xxv A), worn	80726
BYZANTINE **Anastasius I (491–518 CE)—*Tremissis***									
4	1.39	15	↘	DN ANAST ASIVS PP AVG Bust r. pearl-diademed, cuirassed and draped	VICTORIA AVGVSTORVM Victory advancing r., holding wreath and globus cruciger. In r. field, star. In exergue: CONOB		Constantinople	*MIBE*:84, Nos. 11, 12, cut edges	80728
Justin I (518–527 CE)—*Tremissis*									
5	1.38	14	↓	DN IVSTI NVS PP AVG Bust r. pearl-diademed, cuirassed and draped	VICTORIA AVGVSTORVM Victory advancing r., holding wreath and globus cruciger. In r. field, star. In exergue: CONOB		Constantinople	*DOC* 1:37, No. 4, cut edges	80729
Justinian I (527–565 CE)—*Semissis*									
6	1.88	16	↓	[DN IVSTI NI] ANVS PP AVG Bust r. pearl-diademed, cuirassed and draped	VICTORIA AVGGG Victory seated r., writing on shield. In r. field, ☧. In exergue: CONOB		Constantinople	*DOC* 1:74, No. 17, cut edges	80730
Justinian I (527–565 CE)—*Tremissis*									
7	1.42	16	↓	DN IVSTI NI ANVS PP AVG Bust r. pearl-diademed, cuirassed and draped	VICTORIA AVGVSTORVM Victory advancing r., holding wreath and globus cruciger. In r. field, star. In exergue: CONOB		Constantinople	*DOC* 1:74–75, No. 19, cut edges	80731

[i] Coins 1–7 of the hoard appear in Fig. 17.

Table 3. Comparative Gold Hoards from the Ashqelon Region (sol = *solidus*; sem = *semissis*; trem = *tremissis*)

Ruler (date of issue)	Deposition Date: 498 CE or Later			Deposition Date: 527 CE or Later		
	Tell Nimrin (Metcalf and Fulco 1995–1996)	Ḥorbat Rimmon A (Kloner and Mindel 1981)	Ḥorbat Rimmon B (Kloner and Mindel 1981)	Ashqelon Barne‘a	‘En-Gedi I (Bijovsky 2007)	Deir Dassawi (Rahmani 1964)
Constans I (337–350)						2 sol (Antioch) 1 sol (Nicom.)
Constantius II (355–361)				1 sol (Antioch)	1 sol (Thess.)	
Jovian (363–364)						1 sol (Nicom.)
Valentinian I (364–367)	11 sol (Antioch)	2 sol (Antioch)	1 sol (Antioch)	2 sol (Const.)	1 sol (Arelate) 1 sol (Antioch)	
Valens I (364–367)	8 sol (Antioch)				2 sol (Antioch)	
Theodosius II (402–450)			1 sem (Const.)			
Marcian (450–457)			1 trem (Const.)			
Leo I (457–474)	3 sol (Const.)	1 sem (Const.) 2 trem (Const.)	5 trem (Const.)			
Leo II and Zeno (474–475)			1 sem (Const.)			
Zeno (474–475; 476–491)	5 sol (Const.) 2 sol (Thessal.) 1 sol (western)	1 sol (Const.) 1 trem (Const.)	4 sem (Const.) 10 trem (Const.)			
Basiliscus (474–476)	1 sol (with Marcus; Const.)		1 trem (Const.)			
Anastasius I (491–518)	3 sol (Const.)	1 sem (Const.) 4 trem (Const.)	3 sem (Const.) 8 trem (Const.)	1 trem (Const.)	1 trem (Const.)	
Justin I (518–527)				1 trem (Const.)	2 trem (Const.)	
Justinian I (527–565)				1 sem (Const.) 1 trem (Const.)	2 sol (Const.) 1 sem (Const.) 4 trem (Const.)	2 sol (Const.)
Total	34 coins	12 coins	32 coins	7 coins	15 coins	6 coins

Table 4. Catalogue of the Isolated Coins

Cat. No.	Basket No.	Locus	Area	Weight (g)	Diam. (mm)	Axis	Obverse	Reverse	Date Struck (CE)	Mint	References and Notes	IAA No.
LATE ROMAN **Leo I (457–474 CE)?—*Nummus***												
8	100013/2	1004	A	1.29	9	↓	[---] Bust r.	Lion stg. l.		Constantinople?	Cf. *RIC* 10:292, Nos. 666–670, identification uncertain	47196
Zeno, second reign (474–491 CE)—*Nummus*												
9	10041	1014	A	0.94	11		Obliterated	Emperor stg. facing holding long cross and globe?			Cf. *RIC* 10:313, Nos. 953–955, identification uncertain	47204
Uncertain—*Minimi*												
10	10019	1010	A	1.94	11	↑	Obliterated	Inscription out off flan. Victory advancing l., holding wreath?	Second half of 4th c.?		Small flan, probably *Securitas Reipublicae* type	47201
11*	111	8	A	0.96	9	↓	[---] Bust r., pearl-diademed, cuirassed and draped	Victory advancing l., holding palm branch and wreath	First half of 5th c.	Carthage?	Vandalic anonymous? Flan smaller than dies. Cf. *BMCV*:20, Nos. 22–31 Bijovsky 1995:100	47199
12*	10050/1	1013	A	0.85	9 × 11	→	Blundered inscription. Bust r., pearl-diademed, cuirassed and draped	Victory advancing l., holding palm branch and wreath	First half of 5th c.		Bijovsky 2000–2002:199, No. 1, imitative issue, flan smaller than dies	47202
13	10008/1	1006	A	0.36	12		Obliterated	Figure stg?	c. 450–550		Bijovsky 2000–2002:202, No. 5, cast unstruck flan	47197
BYZANTINE **Uncertain—*Follis***												
14	10065	Surface	A	4.74	27 × 14	↓	[---] Bust r., diademed, cuirassed and draped	**M** in l.: star	518–538		Half a coin	46843

[i] Asterisks indicate the isolated coins presented in Fig .18.

Table 4. (cont.)

Cat. No.	Basket No.	Locus	Area	Weight (g)	Diam. (mm)	Axis	Obverse	Reverse	Date Struck (CE)	Mint	References and Notes	IAA No.
Uncertain—*Pentaummium*												
15*	10067	Surface	A	1.98	13	↓	[---] Bust r., diademed, cuirassed and draped	☧ in l.: Γ; in r.: Є	c. 522–537		*MIBE*:99, Nos. 32, 33 (Justin I or Justinian I)	46776
Imitative issue—*Pentanummium*												
16*	10017/2	1004	A	1.93	13	↓	No inscription. Small bust r. within circle	Reversed ☧ within circle (no flanking letters)	6th c.		Small module	47195
17	10054	1019	A	0.97	10	↖	[---] Bust r., pearl-diademed, cuirassed and draped	☧ (rho out of flan)	6th c.		*Nummus* size	47205
18	10023	1006	A	1.52	10 × 13		Obliterated	☧	6th c.		Fragment	47198
19	10034/4	1014	A	0.56	10		Obliterated	☧	6th c.		Fragment	47203
Heraclius—*Hexanummium*												
20*	111	8	A	2.01	14	↑	[ddmhE]RACLS Cross on three steps	S	613–618	Alexandria	*DOC* 2/1:340, No. 198	47200
Arab-Byzantine – *Follis*												
21*	10046/2	1022	A	2.17	17 × 22	←	Imperial figure stg. facing, holding long cross and globe with cross	m to l.:NN; above: ɔ, cross and X; to r.: Λ and Є	c. 640–660		*SICA* 1: Pls. 36, 37, Group E, overstruck; cut in rectangular shape	47206

Ashqelon yields coins of this type and its imitations.[8]

The light weights and poor fabric of many of these coins may indicate that at least some are imitations (Nos. 16–19; Bijovsky 2004:113, Nos. 25–31). The imitations seem to be of local manufacture. Some of them are struck on very small flans (*nummi* size) and are much lighter in weight than the official issues (e.g., No. 17 weighs 0.97 g and No. 19 weighs 0.56 g instead of c. 2.50–3.00 g). Some imitations hardly attempt to resemble their prototype—they bear blundered obverse legends or no inscriptions at all. On some coins, the imperial image is outlined without any inscription as a small bust facing right within a circle (No. 16). The reverse of these imitations is seldom reversed right-left and has no flanking letters or *officina* marks (No. 16). On many others, since the dies are larger than the flans, the upper part of the 'rho' is off the flan (No. 17). The dating of the imitations is still uncertain. They appear together with the official issues, suggesting their production took place contemporaneously. However, Lampinen suggested that they were struck in the early seventh century.[9] Two coins dating to the first half of the seventh century were discovered at the site (Nos. 20, 21), denoting that the *pentanummi* may have remained in circulation until then.

Coin No. 20 is a *hexanummium* of Heraclius minted in Alexandria and dated to 613–618 CE. The latest coin found at the excavation is an Arab-Byzantine coin (No. 21), overstruck on an earlier *follis* which was re-cut into a rectangular shape. Coins of this type, which imitate a prototype by emperor Constans II (*DOC* 2/2, Classes I–IV; *SICA* 1: Group E), can be roughly dated to 640–660 CE.

MISCELLANEOUS FINDS

Persian-Period Terracota

A terracotta figurine was found in the topsoil near Tombs 1 and 2 in Area B (Fig. 19:1). The figurine is handmade of reddish yellow and well-levigated clay. It depicts a broken head bearing a hat. The face is characterized by a

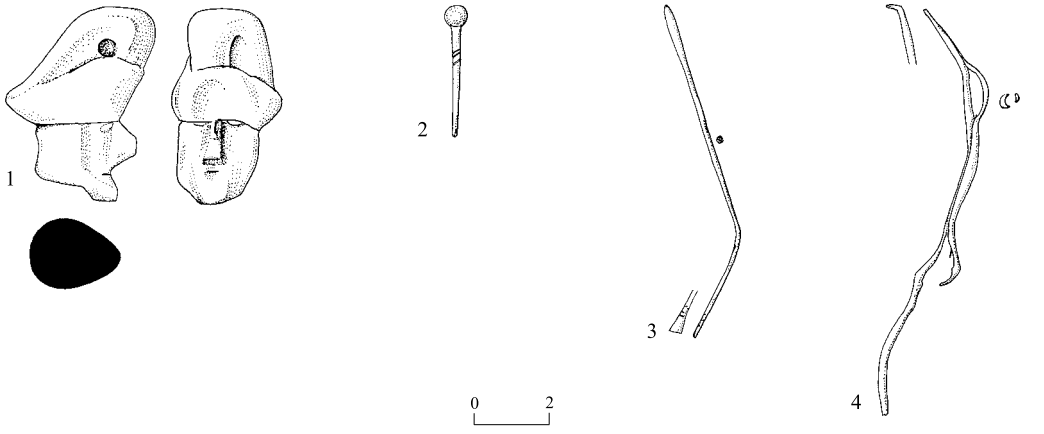

Fig. 19. Miscellaneous finds.

No.	Item	Area	Locus	Context/Feature	Reg No.	Description
1	Figurine	B	2001	Topsoil, Area B	20001/5	Clay
2	*Kohl* stick	A	1010	Fill, Courtyard E	10021/4	Bronze
3	Spatula	A	1013	Topsoil, Rooms F and G	10050/4	Bronze
4	Needle	A	1013	Topsoil, Rooms F and G	10057	Bronze

Table 5. Stone Objects from Area A

Locus	Basket	Material	Description
6	118	Basalt pebble	Rubbing stone?
7	109	Marble	Veneer
1002	10002	Vesicular basalt	Grinding stone fragment
1008	10015	Marble	Paver fragments
1010	10019	Marble	Paver fragment
1012	10025	Marble	?
1022	-	Limestone?	Grinding slab

prominent nose, an incised mouth and a strong chin. While the left ear is slightly insinuated by two incisions, the eyes are difficult to discern. The hat ends in a pointed tip, curled toward the front. The most similar parallels in clay were dated to the Persian period (sixth–fourth centuries BCE; Stern 1982:172, Fig. 295:5, 6). The figurine from Barneʿa B–C must be considered intrusive within the tombs of Area B, showing the existence of a possible Persian-period occupation or burials in the nearby area, like in other parts of Ashqelon (Stager 1993:107–110; Golani 1996).

Marble Fragments

Four marble panel fragments were discovered (Table 5), none of which were found in clear contexts. One is a veneer found in Open Area I (L7) and two are pavers fragments found in the fill above Room B (L1008) and Courtyard E (L1010). One of the pavers exhibits a 120° angle in the corner and plaster remains (possibly *opus sectile*). All the fragments are made of light gray marble, likely originating in Asia Minor.[10] It seems that these objects may have originated from a church in the vicinity (Tzaferis 1971) and were in secondary use. Alternatively, they may have arrived at the site via post-depositional processes.

Stone Tools

Three stone tools were found (Table 5): a grinding slab, probably made of limestone (L1022; see Fig. 8), a fragment of a grinding stone made of vesicular basalt (L1002), and a round basalt pebble (L6) probably utilized as a rubbing stone. Only the grinding slab was found in context.

Metal Objects

Ten identifiable metal objects were found in Area A, all of them were presumably copper alloys (Table 6). Fragments of iron objects were found in several contexts in Areas A and B, although none could be dated. Of the identifiable objects, three are presented in some detail (Fig. 19:2–4).

The first object is a broken bronze stick (Fig. 19:2), round in section and found in Room C. It is over 3.5 cm long, and its diameter widens from 0.2 to 0.3 cm, with a spherical end of 0.6 cm in diameter. Since it is broken, we do not know whether it terminated with a spatula or a simple pointed end. The second object (Fig. 19:3) is a small bronze spatula, found in the topsoil above Rooms F and G. It is twisted; its reconstructed length is 8.9 cm, with a diameter widening from 0.1 to 0.2 cm, ending in a trapeze-shaped ladle. Both objects were probably used for *kohl* or other cosmetic purposes, dating from the Roman to the Early Islamic periods (cf. Dayagi-Mendels 1989; Messika 2006:105–107). The last metal object (Fig. 19:4) is a broken bronze needle, and was found within the topsoil above Rooms F and G.

Table 6. Metal Objects from Area A

Reg. No.	Locus	Phase	Description	Figure
101	2	1	Plaque fragment	
115	10	3	Pin fragment	
121/1	4	1	Plaque fragment	
121/2	4	1	Plaque fragment	
10021/4	1010	2	Stick fragment	19:2
10041	1019	3	Plaque fragment	
10050/4	1013	1	Spatula	19:3
10053	1017	2	Plaque fragment	
10056	1023	3	Strip fragment	
10057	1013	1	Needle	19:4

DISCUSSION AND CONCLUSIONS

The excavations at Compound 6 of Barne'a B–C exposed a series of small buildings in Area A and part of a cemetery in Area B. Three phases were established in Area A, though the exact date of Phase 1 is not clear. Phases 2 and 3 are dated to the Byzantine period, with the construction of Phase 3 dating from approximately the sixth century, and the occupation of Phase 2 probably ending in the seventh century CE.

According to the pottery, coins and some of the glass fragments found in Compound 6 (and other sites in the Barne'a area), it seems that a settlement existed at the site during the fifth century CE or even earlier, but the structures did not reflect this. Furthermore, due to the meager remains, it is difficult to reconstruct the architecture of the excavated structures. Floors and walls barely survived, though a few architectural features such as the marble pavers and veneer could suggest a high level of architectural investment if these fragments were in secondary usage for the buildings. The water cistern tentatively assigned to Phase 1 may have been in use during other phases, but as we noted above, its dating is uncertain. No springs are attested in the area, and wells could have supplied potable water (Nir 2008).

The pottery assemblage from Area A at Compound 6 of Barne'a B–C is rather homogeneous, and is characterized by a significant number of storage jars—presumably indicating that some of the rooms served for storage. The assemblage also includes cooking and serving vessels, which might indicate a domestic purpose for the architectural complex. Part of the assemblage is composed of imported vessels, such as the amphorae of Tunisian origin, produced and exported until the mid-sixth century CE. Another imported amphora was probably produced in Cyprus or Syria and was presumably utilized for storing oil; it is dated between the fifth and seventh centuries CE. Other finds (e.g., metals, stone objects, and glass vessels) are scarce, suggesting an industrial application. The glass vessels are too fragmentary to enable any conclusions regarding the nature of this assemblage, though a great number of them are dated to the Byzantine period.

The candlestick-type bottle found in Tomb 1 is very common in late first to mid-third centuries CE contexts, and is the only find to date the cemetery of Area B, although later datable pottery was found around the tombs.

The numismatic evidence in Area A, Phases 2 and 3 is in accordance with the conclusions based on pottery and glass

vessels. The majority of the coins belong to the sixth century CE. The circumstances that brought about the concealment of the hoard are unknown—the coins were not found wrapped or sealed within a container; they were simply within the fill under the floor. The nominal value of the gold coins was in theory identical to its metal intrinsic value, regardless of the date of minting. The small size and significant number of fractions of *solidus* in the hoard may indicate that this was a modest accumulation of wealth, perhaps the savings of a private individual put aside for future needs. The fact that the *solidi*, which constitute the earliest coins in the hoard, show signs of wear as evidenced by their light weight, attests to their prolonged circulation. The hoard was composed of one early and one late part. We do not know how these parts came together to the hands of the proprietor and came to be hoarded in Room B sometime after the first two decades of the sixth century CE. Isolated coins found around the site show a continuous occupation of the site until the seventh century CE, which is in accordance with the dating of W105's foundation trench (Phase 2).

Architecture, pottery and numismatic finds indicate that in Area A of Compound 6 there were private houses invested in a small-scale economy with amphorae and jars for wine or oil storage, as well as domestic use. These houses seem to be the continuation of the structural remains found in Area C of Golani's (2007) excavations. There, several badly preserved walls and plaster installations were reported (dated by the excavator to the fifth–sixth centuries CE). These structures were labeled *a posteriori* as Stratum I (Golani 2008) and defined as sporadic remains, primarily pits, from the Byzantine period that were found atop the *kurkar* ridge facing the seashore.

Human remains found in Area A, mostly infants, were not in context.[11] Unfortunately, not much can be concluded regarding Area B since few finds were encountered within Tomb 1, and Tomb 2 was not excavated. Most of the finds (mainly pottery) were found around the tombs. According to the only datable find, the glass candlestick bottle, Tomb 1 should to be dated to the Roman period.

A second cemetery seemed to exist in Golani's Area E, where rectangular cists were identified, dug into sterile soil and built of local *kurkar* stone and mud bricks (Golani 2007: Figs. 7–9). These structures, generally oriented north–south, were not excavated. Since they were apparently overlaid by the Byzantine Stratum I, the excavator (Golani 2007) proposed to consider these tombs to be associated with the EB I settlement, although there are no known tombs similar to the cists of Ashqelon-Barne'a during the Early Bronze Age in the Southern Levant. We therefore suggest that these tombs could also be dated to the Roman or the Byzantine periods. Tombs of the same type as the cists and associated with pottery of the Byzantine period were found in Sites 2 and 7 of the surveys conducted by Berman and Barda (2005).

According to historical records, the Byzantine settlement in Ashqelon had a suburb called Maiumas Ascalon (Ashqelon Maritime; Le Quien 1740). Bagatti (1974) suggested that this suburb existed in the southern part of Ashqelon; Hirschfeld (1990:153) suggested that Maiumas Ascalon was located north of the ancient site of Tel Ashqelon.[12] During the excavation at the tell conducted by Stager (1993; Stager, Schloen and Master 2008) and Rachel Bar-Nathan (pers. comm.), a Byzantine urban settlement was revealed.[13] This includes a well-planned urban center with streets, a forum, a bathhouse, a basilica and three churches, including one near the Jerusalem gate (Tzaferis 2008). Agricultural installations (Brand 2001) were also found near the tell.

The archaeological research at and near Barne'a and the archaeological maritime survey conducted by Galili, Sharvit and Dahari (2001) seem to show that two urban centers existed in Ashqelon during the Byzantine period. One was in the south, with its center near the tell, and one in the north, Maiumas Ascalon, north of Sheikh 'Awad, where remains of city walls

and buildings were found (Galili, Sharvit and Dahari 2001:13, 32; Fig. 1:8). Three churches (Tzaferis 1971) were also found in the old part of the Barne'a neighborhood and dated from the fifth–sixth centuries CE.

The remains excavated at Barne'a B–C are part of this northern settlement, including the houses and cemeteries. Both the archaeological remains and historical sources point to industrial development in this part of the Palaestina I province during the Byzantine period, including the cultivation, production and export of onion, wine and oil (Dvorjetski 2001; Israel 2001). The remains unearthed at Barne'a B–C should be considered to be connected to this industry. Presently, we cannot state whether it was part of Maiumas Ascalon, a peripheric neighborhood, or a more isolated agricultural settlement related to the city.

Unfortunately, we do not know why these remains were not well-preserved. It seems that apart from modern development in the neighborhood, post-depositional and perhaps historical events in antiquity caused the archaeological remains to survive in an extremely partial manner.

ACKNOWLEDGMENTS

We are indebted to the anonymous reader and to the editor, Ilana Peters, for their constructive comments.

APPENDIX 1. List of Loci and Walls

Locus/Wall	Square	Phase	Feature	Description
Area A				
L1	J6	1	Well H	Topsoil and fill
L2	J5	1	Open Area I	Topsoil
L3	J4	1	Open Area I	Topsoil
L4a	J6	1	Well H	Fill of Well H, entrance
L4b	J6	1	Well H	Fill of Well H, upper part
L5	J6	1	Well H	Fill outside Well H, west
L6	J6	1	Well H	Fill outside Well H, east
L7	J5	3	Open Area I	Fill under topsoil
L8	J6	1	Well H	Fill outside Well H, north
L9	J6	1	Well H	Fill outside Well H, south
L10	K6–7	3	Room A	Fill north of W107 and foundation trench of W107
L11	JK7	3	Room A	Fill of Room A
L12	JK7	3	Room A	Fill east of W108
L13	J6	1	Well H	Fill under topsoil in Well H
L1000	G7	1		Topsoil
L1001	G8	1	Open area	Topsoil
L1002	I7	1	Courtyard E	Topsoil
L1003	I8	1	Room B	Topsoil
L1004	G8	1	Open area	Topsoil
L1005	G1	1		Topsoil
L1006	G7	1		Topsoil

APPENDIX 1. (cont.)

Locus/Wall	Square	Phase	Feature	Description
L1007	I8	3	Room B	Collapse
L1008	I8	3	Room B	Fill on top of W102
L1009	I8	3	Room B	Floor, under floor?
L1010	I7	2	Courtyard E	Fill
L1011	I8	2	Room C	Fill
L1012	I8	3	Room B	Fill outside Room B
L1013	G7	1	Rooms F, G	Topsoil
L1014	G8	?	Open area	Fill
L1015	G7	3	Rooms F, G	Top of collapsed wall (W106)
L1016	I7–8	1	Rooms C, D	Topsoil, baulk
L1017	I7	2	Court E	Fill above floor
L1018	I8	3	Room B	Fill under topsoil
L1019	I7–8	3	Rooms C, D	Fill under topsoil, baulk
L1020=1023	G7	3	Room F	Floor
L1021	G7	3	Room G	Fill under collapse
L1022	I7	3	Court E	Fill above floor
L1023=1020	G7	3	Room F	Floor, baulk
L1024	I8	3	Room B	Foundation trench
L1025	G7	1	Pit	Fill of pit
L1026	G7	1	Pit	Fill of pit
L1027	I8	3	Room B	Fill under floor
L1028	I7	2	Courtyard E	Floor
L1029	I8	2	Room D	Paved floor
L1030	I7–8	1	Pit	Fill of pit
L1031	I8	1	Pit	Fill of pit
L1032	I7	2	Courtyard E	Installation
W100	I8	2, 3	Rooms B, C	Wall west of Room B
W101	I8	3	Room B	Wall north of Room B
W102	I8	3	Room B	Wall east of Room B
W103	I8	3	Room B	Wall south of Room B
W104	I7–8	2	Room C	Wall northwest of Room C
W105	I8	2	Room C, Courtyard E	Wall north of Room C
W106	G7	3	Rooms F, G	Wall west of Room F
W107	K6–7	3	Room A	Wall north of Room A
W108	K7	3	Room A	Wall east of Room A
W109	J6	1	Well H	Wall south of Well H
W110	J6	1	Well H	Wall north of Well H
W111	J6	1	Well H	Wall east of Well H
W112	J6	1	Well H	Wall in the middle of Well H
W113	J6	1	Well H	Wall west of well H

APPENDIX 1. (cont.)

Locus/Wall	Square	Phase	Feature	Description
Area B				
L2000	D6		Open area	Topsoil south of Tombs 1 and 2
L2001	E6		Tomb 1, Tomb 2	Topsoil above Tombs 1 and 2
W2002	E6		Tomb 2	Wall south of Tomb 2
W2003	E6		Tomb 2	Wall east of Tomb 2
L2004	E6		Tomb 1	Fill of Tomb 1
W2005	E6		Tomb 1	Wall west of Tomb 1
W2006	E6		Tomb 1	Wall north of Tomb 1
W2007	E6		Tomb 1	Wall south of Tomb 1
W2008	E6		Tomb 1, Tomb 2	Wall between Tombs 1 and 2
L2009	F6		Open area	Topsoil north of Tombs 1 and 2
L2010	E7		Open area	Topsoil east of Tomb 1
L2011	E5		Open area	Topsoil west of Tomb 1
W2012	E6		Tomb 1	Wall?
L2013	E6		Tomb 2	Fill of Tomb 2 (not excavated)

NOTES

[1] Ianir Milevski and Alexander Krokhmalnik are the main authors of this report; Gabriela Bijovsky is the author of *The Coins*; Debora Sandhaus is the author of *The Pottery*; and Yael Gorin-Rosen is the author of *The Glass Vessels*.

[2] The excavations were carried out by request and with funding from the Economic Company for the Development of Ashqelon. The excavations, on behalf of the Israel Antiquities Authority, were conducted by Alexander Krokhmalnik and Ianir Milevski (Permit No. A-4027), with the assistance of Pirhiya Nahshoni (district archaeologist), Hayim Lavi (administration), Vadim Essman (surveying), Tsila Sagiv (photography), Natalia Zak and Irina Brin (drafting), Peter Fabian and Debora Sandhous (pottery), Yael Gorin-Rosen (glass vessels), Yossi Nagar (physical anthropology), Yosef Bukengolts (pottery restoration), Carmen Hersch (finds drawing), Gabriela Bijovksy (numismatics), and workers from Ashqelon of Project 500 and the contractor company. The article was edited by Ilana Peters.

[3] Several hundreds of meters to the southwest, Haimi (2008) excavated a Hellenistic site dated to the second century BCE; this period is not in the scope of this paper.

[4] The bones represent a metapod, a fibula, and fragments of a tibia and vertebra.

[5] The human bones are very fragmented and represent the long bones of a juvenile or adult. We thank Yossi Nagar for this information.

[6] The coins were cleaned in the IAA laboratories under the direction of Lena Kupershmidt, and were photographed by Clara Amit. All the unidentifiable coins can be dated roughly to the mid-fifth–mid-sixth centuries according to their size and fabric.

[7] This type appears also in other coastal sites like Ḥof Ziqim, Apollonia, and in significant numbers in Caesarea. Its frequency decreases toward the hinterland—Bet Guvrin, Ḥorbat Rimmon, Nirim-Maʿon and in two sites in Lower Galilee, Zippori and Bet She'an. The exception to the rule is Jerusalem, where dozens of Chi-Rho *pentanummi* were discovered. Interestingly, only two coins of this type are recorded in numismatic reports from Jordanian sites. Instead, it seems that the Є epsilon type was more common (e.g., Petra church, see Betlyon 2001: Nos. 130–135 and Limes Arabicus project, see Betlyon 2006:435, Nos. 565–568). The data was compiled within the framework of the author's (Gabriela Bijovsky) Ph.D. dissertation.

[8] Some examples are the following: four imitations in Ashqelon Migdal (IAA 62601, 62604, 62608, 66905); seven coins at Ḥorbat Ḥaẓaẓ (Bijovsky and Sokolov 2007:102, Nos. 21–24); 13 coins at Barne'a (IAA Nos. 46776, 47195, 47198, 47203, 47205, 100000) and Barne'a West (IAA Nos. 117396, 117399, 117403, 117408, 117412, 117414, 117426, 117431).

[9] Peter Lampinen (pers. comm.), based on a hoard of over 1000 *pentanummi* discovered in Caesarea. The hoard is unpublished; however, a lecture on this discovery was presented by Peter Lampinen at the 28th Annual Byzantine Studies Conference, 4–6 October, 2002 at the Ohio State University, Columbus, Ohio (http://www.byzconf.org/2002abstracts.html).

[10] Similar marble fragments discovered at Caesarea and Scythopolis were tested and found to originate from Prochonesus, Sea of Marmaris (Pearl and Margaritz 1991). We thank Gaby Mazor for the information on this subject.

[11] Infant remains in jars were found in the EB I buildings excavated by Golani (2005: Fig. 6; 2007: Fig. 12; 2008: Fig. 11). No pottery was found related to the anthropological remains in Area A.

[12] We thank Uzi Dahari for these references.

[13] The results of the new excavations are still unpublished. We thank Rachel Bar-Nathan, Laurence Stager and Daniel Master from the Leon Levy expedition to Ashqelon for sharing the results of their work with us.

REFERENCES

Ahipaz N. 2007. A Hoard of Byzantine Solidi from Deir 'Aziz Synagogue. *INR* 2:157–165.

Bagatti B. 1974. Ascalon e Maiuma di Ascalon nel VI secolo. *LA* 24:227–264.

Barag D. 1970. *Glass Vessels of the Roman and Byzantine Period in Palestine.* Ph.D. diss. The Hebrew University. Jerusalem (Hebrew; English summary, pp. I–VIII).

Baumgarten Y. 2000. Evidence of a Pottery Workshop of the Byzantine Period at the Foot of Tel Ashdod ('Ad Halom Site). *'Atiqot* 39:69*–74* (Hebrew; English summary, p. 201).

Beltràn Lloris M. 1970. *Las ánforas romanas en España.* Zaragoza.

Berman A. and Barda L. 2005. *Map of Niẓẓanim–West* (87), *Map of Niẓẓanim–East (88)* (Archaeological Survey of Israel). Jerusalem.

Betlyon J.W. 2001. Coins from the 1992–93 Excavations. In Z.T. Fiema and C. Kanellopoulos. *The Petra Church.* Amman. Pp. 384–390.

Betlyon J.W. 2006. The Coins. In T. Parker ed. *The Roman Frontier in Central Jordan: Final Report on the Limes Arabicus Project, 1980–1989* (Dumbarton Oaks Studies XL). Washington. Pp. 413–444.

Bijovsky G. 2000–2002. The Currency of the Fifth Century CE in Palestine—Some Reflections in Light of the Numismatic Evidence. *INJ* 14:196–210.

Bijovsky G. 2004. Coins from Ashqelon, Semadar Hotel. *'Atiqot* 48:112–121.

Bijovsky G. 2007. The Coins. In Y. Hirschfeld. *Ein Gedi Excavations* II: *Final Report (1996–2002).* Jerusalem. Pp. 157–233.

Bijovsky G. and Sokolov H. 2007. The Coins from Ḥorbat Ḥaẓaẓ, Ashqelon. *'Atiqot* 56:99–104 (Hebrew; English summary, pp. 81*–82*).

Bijovsky G., Milevski I. and Sandhaus D. 2014. A Byzantine Gold Hoard from Ashqelon Barne'a. *INR* 9:193–212.

BMCV: W. Wroth. *Catalogue of the Coins of the Vandals, Ostrogoths and Lombards and the Empires of Thessalonica, Nicaea and Trebizond in the British Museum.* London 1911.

Brand E. 2001. Agricultural Device in Ashkelon Coast. In A. Sasson, Z. Safrai and N. Sagiv eds. *Ashkelon: A City on the Seashore.* Ashqelon. Pp. 203–211 (Hebrew).

Carmi I., Eldar-Nir I., Nir Y., Werker E., Stager L.E. and Johnson B.L. 2008. Dating Ancient Water Wells Using Radiocarbon and Ceramics. In L. Stager, J.D. Schloen and D. Master. *Ashkelon* 1: *Introduction and Overview (1985–2006)*. Winona Lake. Pp. 127–130.

Dayagi-Mendels M. 1989. *Perfumes and Cosmetics in the Ancient World* (The Israel Museum Catalogue 305). Jerusalem.

DOC 1: A.R. Bellinger. *Catalogue of the Byzantine Coins in the Dumbarton Oaks Collection and in the Whittemore Collection* 1: *Anastasius I to Maurice 491–602.* Washington 1966.

DOC 2: P. Grierson. *Catalogue of the Byzantine Coins in the Dumbarton Oaks Collection and in the Whittemore Collection* 2: *Phocas to Theodosius III, 602–717.* Washington 1968.

Dvorjetski E. 2001. The Economy Activity and Special Agricultural Products of Ashqelon from

the Hellenistic to the Byzantine Period. In A. Sasson, Z. Safrai and N. Sagiv eds. *Ashkelon: A City on the Seashore.* Ashqelon. Pp. 119–134 (Hebrew).

Galili E., Sharvit J. and Dahari U. 2001. Ashqelon and the Sea in the Light of Archaeological Coastal and Underwater Finds. In A. Sasson, Z. Safrai and N. Sagiv eds. *Ashkelon: A City on the Seashore.* Ashqelon. Pp. 11–38 (Hebrew).

Golani A. 1996. A Persian Period Cist Tomb on the Ashqelon Coast. *'Atiqot* 30:115–119.

Golani A. 2005. Ashqelon, Barne'a B–C. *HA–ESI* 117 (March 28). http://www.hadashot-esi.org.il/Report_Detail_Eng.aspx?id=134&mag_id=110 (accessed July 24, 2017).

Golani A. 2007. Ashqelon, Barne'a B–C. *HA–ESI* 119 (June 11). http://www.hadashot-esi.org.il/report_detail_eng.asp?id=533&mag_id=112 (accessed July 24, 2017).

Golani A. 2008. Ashqelon, Barne'a B–C. *HA–ESI* 120 (June 5). http://www.hadashot-esi.org.il/report_detail_eng.asp?id=805&mag_id=114 (accessed July 24, 2017).

Gorin-Rosen Y. 2002. A Group of Glass Vessels from Nir Gallim. *'Atiqot* 43:119–126.

Gorin-Rosen Y. and Katsnelson N. 2007. Local Glass Production in the Late Roman–Early Byzantine Periods in Light of the Glass Finds from Khirbat el-Ni'ana. *'Atiqot* 57:73–154.

Grierson P. and Blackburn M. 1986. *Medieval European Coinage with a Catalogue of the Coins in the Fitzwilliam Museum, Cambridge* I: *The Early Middle Ages (5th–10th Centuries)*. Cambridge.

Grierson P. and Mays M. 1992. *Catalogue of Late Roman Coins in the Dumbarton Oaks Collection and the Whittemore Collection: From Arcadius and Honorius to the Accession of Anastasius.* Washington.

Haimi Y. 2008. Ashqelon, Barne'a. *HA–ESI* 120 (November 23). http://www.hadashot-esi.org.il/Report_Detail_Eng.aspx?id=953&mag_id=114 (accessed July 24, 2017).

Haldon J.F. 2000. Production, Distribution and Demand in the Byzantine World, c. 660–840. In I.L. Hansen and C. Wickham eds. *The Transformation of the Roman World* (11). Leiden. Pp. 225–264.

Hayes J.W. 1972. *Late Roman Pottery.* London.

Hendy M.F. 1985. *Studies in the Byzantine Monetary Economy c. 300–1450.* Cambridge.

Hirschfeld Y. 1990. A Trade City State during the Roman and Byzantine Periods. In N. Arbel ed. *Ashqelon 4,000 and 40 More Years.* Tel Aviv. Pp. 57–158 (Hebrew).

Israel Y. 2001. The Economy of the Gaza-Ashkelon Region in the Byzantine Period in the Light of the Archaeological Survey and Excavations of the 'Third Mile Estate' near Ashkelon. In A. Sasson, Z. Safrai and N. Sagiv eds. *Ashkelon: A City on the Seashore.* Ashqelon. Pp. 213–226 (Hebrew).

Katsnelson N. 1999. Glass Vessels from the Painted Tomb at Migdal Ashqelon. *'Atiqot* 37:67*–82*.

Katsnelson N. and Jackson-Tal R.E. 2004. The Glass Vessels from Ashqelon, Semadar Hotel. *'Atiqot* 48:99–109.

Keay S.J. 1984. *Late Roman Amphorae in the Western Mediterranean: A Typology and Economic Study; The Catalan Evidence* (BAR Int. S. 196). Oxford.

Kloner A. and Mindel T. 1981. Two Byzantine Hoards from the Ancient Synagogue of Horvat Rimmon. *INJ* 5:60–68.

Lampinen P. 1999. The Gold Hoard of 4th c. *Solidi* Found in 1993. In K.G. Holum, A. Raban and J. Patrich eds. *Herod's Temple, the Provincial Governor's Praetorium and Granaries, the Later Harbour, a Gold Coin Hoard, and Other Studies* (Caesarea Papers 2; *JRA* Suppl. S. 35). Portsmouth, R.I. Pp. 368–388.

Le Quien M. 1740. *Oriens Christianus*. Paris.

Lehrer G. 1972. Three Fragments from Rare Glass Objects from Haaretz Museum Collection. *Museum Haaretz Bulletin* 14:65–66 (Hebrew).

LRBC II: R.A.G. Carson and J.P.C. Kent. Bronze Roman Imperial Coinage of the Later Empire, A.D. 346–498. In *Late Roman Bronze Coinage A.D. 324–498.* London 1954. Pp. 41–114.

Magness J. 1987. The Pottery from the 1980 Excavations at Ma'on (Nirim). *Eretz-Israel* 19:216–224 (Hebrew).

Magness J. 1993. *Jerusalem Ceramic Chronology: Circa 200–800 CE (JSOT*/ASOR Monograph Series 9). Sheffield.

Magness J. 2003. Late Roman and Byzantine Pottery. In H. Geva. *Jewish Quarter Excavations in the Old City of Jerusalem Conducted by Nahman Avigad, 1969–1982* II: *The Finds from Areas A, W and X-2; Final Report.* Jerusalem. Pp. 423–432.

Majcherek G. 1995. Gaza Amphorae: Typology Reconsidered. In H. Meyza and J. Młynarczyk eds. *Hellenistic and Roman Pottery in the Eastern Mediterranean: Advances in Scientific Studies (Acts of the II Nieborów Pottery Workshop; Nieborów, 18–20 December 1993)*. Warsaw. Pp. 163–178.

Messika N. 2006. An Early Islamic Site at Kafr Jinnis Near Lod. *Salvage Excavations Reports* 3:84–112.

Metcalf W.E. and Fulco W.J. 1995–1996. Coins from the Excavations at Tell Nimrin. *AJN* 7–8:145–154.

MIBE: W. Hahn. *Money of the Incipient Byzantine Empire (Anastasius I–Justinian I, 491–565)* (Veröffentlichungen des Instituts für Numismatik und Geldgeschichte der Universität Wien 6). Vienna 2000.

Milevski I. and Krokhmalnik A. 2010. Ashqelon, Barne'a B–C. *HA–ESI* 122 (May 10). http://www.hadashot-esi.org.il/report_detail_eng.aspx?id=1395&mag_id=117 (accessed July 24, 2017).

Nahshoni P. 1999. A Byzantine Site in the Migdal Neighborhood, Ashqelon. *'Atiqot* 38:99*–111* (Hebrew; English summary, p. 229).

Nahshoni P. 2007. Remains from the Roman and Byzantine Periods at Ḥorbat Ḥaẓaẓ, Ashqelon. *'Atiqot* 56:81–97 (Hebrew; English summary, pp. 78*–81*).

Nir Y. 2008. The Wells of Ashkelon. In L. Stager, J.D. Schloen and D. Master. 2008. *Ashkelon* 1: *Introduction and Overview (1985–2006)*. Winona Lake. Pp. 105–107.

Noeske H.C. 2000. *Münzfunde aus Ägypten* 1: *Die Münzfunde des ägyptischen Pilgerzentrums Abu Mina und die Vergleichsfunde aus den Diocesen Aegyptus und Oriens vom 4–8. Jh. N. Chr. Prolegomena zu einer Geschichte des spätrömischen Münzumlaufs in Ägypten und Syrien* (Studien zu Fündmunzen der Antike 12) (3 vols.). Berlin.

Oked S. 2001. "Gaza Jar": A Chronicle, and Economic Overview. In A. Sasson, Z. Safrai and N. Sagiv eds. *Ashkelon: A City on the Seashore.* Ashqelon. Pp. 227–250 (Hebrew; English summary, pp. XIII–XIV).

Pearl Z and Magaritz M. 1991. Stable Isotopes and the Roman Marble Trade. Evidence from Scythopolis and Caesarea, Israel. In H.P. Taylor, J.R. O'Neil and I.R. Kaplan eds. *Stable Isotope Geochemistry: A Tribute to Samuel Epstein.* San Antonio. Pp. 295–303.

Rahmani L.Y. 1964. Two Hoards of Byzantine Coins. *INJ* 2:19–23.

RIC VIII: J.P.C. Kent. *The Roman Imperial Coinage* VIII: *The Family of Constantine I, A.D. 337–364.* London 1981.

RIC IX: J.W.E. Pearce. *The Roman Imperial Coinage* IX: *Valentinian I–Theodosius I.* London 1951.

RIC X: J.P.C. Kent. *The Roman Imperial Coinage* X: *The Divided Empire and the Fall of the Western Parts. AD 395–491.* London 1994.

Riley J.A. 1979. The Coarse Pottery form Berenice. In J.A. Lloyd ed. *Excavation of Sidi Khrebish Beghazi (Berenice)* II (Supplement to Libya Antiqua V). Tripoli. Pp. 91–467.

SICA 1: S. Album and T. Goodwin. *Sylloge of Islamic Coins in the Ashmolean* 1: *The Pre-Reform Coinage of the Early Islamic Period.* Oxford 2002.

Stager L.E. 1993. Ashkelon. In *NEAHL* 1. Pp. 103–112.

Stager L.E., Schloen J.D. and Master D. 2008. *Ashkelon* 1: *Introduction and Overview (1985–2006)*. Winona Lake.

Stern E. 1982. *Material Culture of the Land of the Bible in the Persian Period, 538–332 B.C.* Jerusalem.

Tzaferis V. 1971. Byzantine Churches and Inscriptions in Israel. *Eretz-Israel* 10:241–244 (Hebrew; English summary, pp. XVIII).

Tzaferis V. 2008. The Church by the Jerusalem Gate. In L. Stager, D.J. Schloen and D. Master. *Ashkelon* 1: *Introduction and Overview (1985–2006)*. Winona Lake. Pp. 399–403.

Vitto F. Forthcoming. Late Byzantine and Early Islamic Remains at Ashqelon-Barne'a. *'Atiqot.*

Ustinova Y. and Nahshoni P. 1994. Salvage excavations in Ramot Nof, Be'er Sheva. *'Atiqot* 25:157–177.

Williams F. 1979. The Heavy Mineral Separation of Ancient Ceramics by Centrifugation: A Preliminary Report. *Archaeometry* 21.2:177–182.

Winter T. 2006. The Glass Vessels from 'Ein ez-Zeituna. In D. Glick. A Salvage Excavation at 'Ein ez-Zeituna in Nahal 'Iron. *'Atiqot* 51:77–84.