'Atiqot 103, 2021

An Early Bronze Age I Site at Ashqelon, Afridar (Area E-2)

Amir Golani and Nir Shimshon Paran

The EB I site of Ashqelon is found near the seashore, within the confines of the modern city, on Israel's southern coast. The settlement was established in a natural trough created by two long, wide and low *kurkar* ridges that ran parallel to the coastline. This area was an ecological niche wherein fertile soils, a high groundwater level and varied flora and fauna created a self-contained subsistence area of distinctive character. These conditions and the high water table, easily accessible through the digging of shallow wells (Gophna and Liphschitz 1996:145; Nir 2008), enabled a pattern of agricultural subsistence developed during EB I (Gophna 1997). Moreover, Ashqelon's position on the western side of a break in the sand dunes that constrict this area to the east allowed easy access from the inland regions to the coast. This direct access made Ashqelon an important entrepôt for maritime and overland trade throughout EB I (Gophna 2002; Golani 2014b). A typical EB I juglet containing Nilotic shells found off the coast of 'Atlit has provided evidence for maritime trade with Egypt along the Mediterranean coast during this time (Sharvit et al. 2002). Increased precipitation, rising groundwater, and the formation of marshlands due to inadequate drainage, apparently led to an extensive abandonment of this region, as well as of much of the coastal plain in Israel, from the onset of EB II in c. 2900 BCE (Faust and Ashkenazy 2009; Ackermann et al. 2019).

Ashqelon is one of the largest and most extensively excavated EB I occupations in the Southern Levant (for an updated review of explorations at the site as of 2019, see Golani 2019:1–8). Since 1990, intensive development of the modern city has been the impetus for rescue excavations and extensive mechanical test trenching, the majority of which have been carried out by the Israel Antiquities Authority (see Appendix 1). These revealed a large and sporadic settlement that spread out from Tel Ashqelon in the south to the Barne'a neighborhood in the north, and from the seashore to about one kilometer inland. The region of Ashqelon, Barne'a has undergone extensive excavation (Golani 2019) and numerous excavations have been carried out within the area known as Ashqelon, Afridar (Fig. 1). The EB I occupation is composed of several nonnucleated patches separated by large open areas devoid of archaeological remains. It may be seen as a single long-term settlement wherein the focus of habitation shifted over time during EB I (see Golani 2019: Fig. 1.1; forthcoming [c]). The site was first settled during early EB I (EB IA), the remains of which were revealed in several locales, and the settlement appears to have decreased in size during late EB I (EB IB).

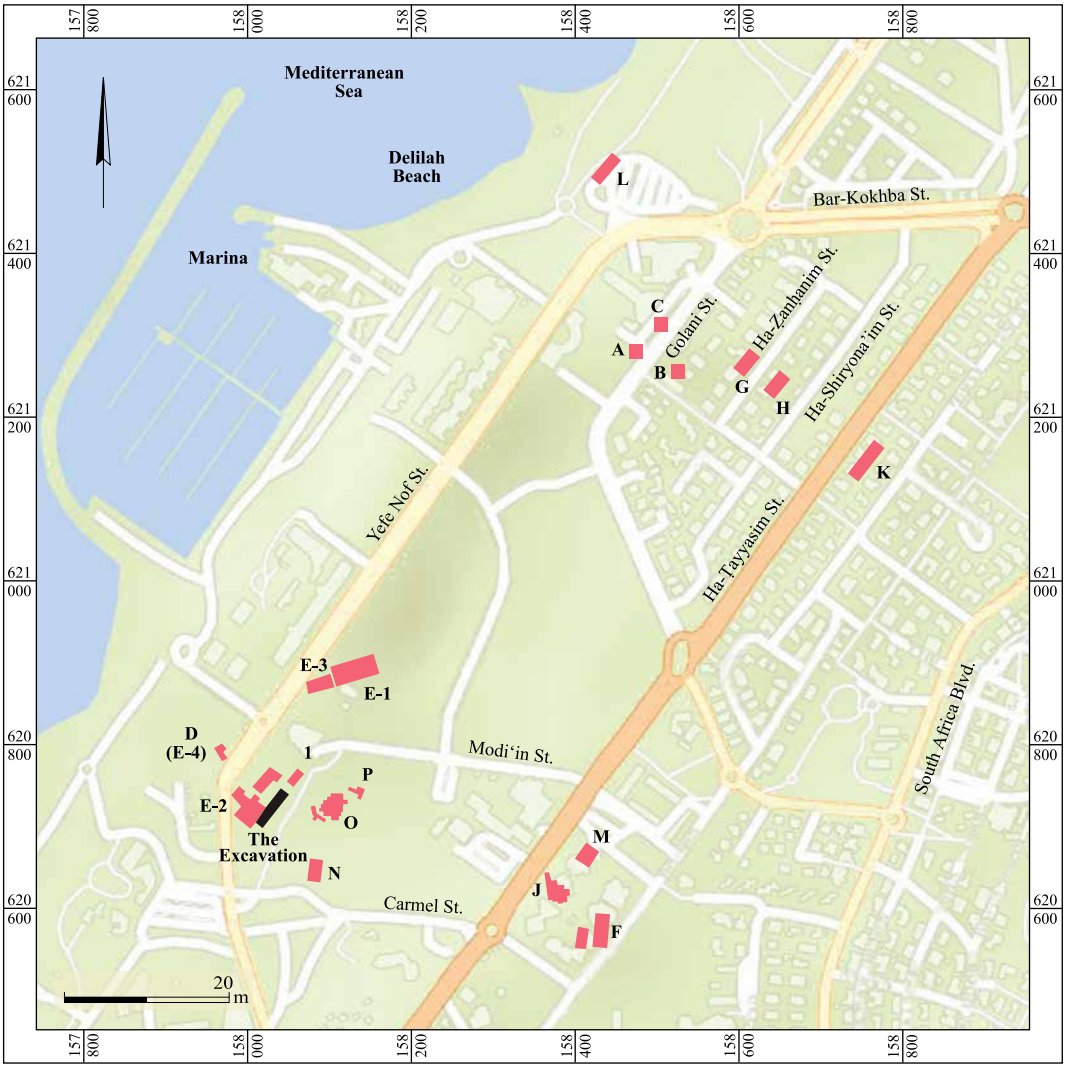

A–Gophna 2002a, 2004
B–Gophna 2002a, 2004
C–Brandl and Gophna 1994; Gophna 2002a
D (E-4)–Gophna 2002a, 2004; Wallach 2003
E-1–Golani 2004, 2018
E-2–Golani 2004, Golani and Paran, this volume
E-3–Golani 2004
F–Khalaily 2004
G–Braun and Gophna 2004
H–Braun and Gophna 2004
J–Baumgarten 2004
K–Baumgarten 2006; Haimi 2009
L–Garfinkel 1999, 2008
M–Golani 2008b
N–Golani 2014a; forthcoming b
O–Paran 2014; Golani and Pasternak 2020
P–Golani 2017
10–Unpublished: Yuval Yekutieli and Nir-Shimshon Paran, Ben-Gurion University
Delilah Beach–Toueg 2010

Fig. 1. Location map of excavation areas with EB I remains in Afridar.

The site was first probed in 1968, when Ram Gophna exposed the remains of a massive EB IB mud-brick building in Afridar Area A (Fig. 1; Gophna 2002a). Since then, numerous rescue projects (Fig. 1) have revealed a continuous settlement spanning the entirety of

EB I. Although all localities are regarded as relating to one site, each was treated as a separate excavation area and consequently processed, analyzed and published individually. In addition, several syntheses have also been produced (e.g., Golani and Segal 2002; Golani and Nagar 2011; Rosenberg and Golani 2012; Golani 2013; 2014b; forthcoming [b]).

During April and May 2011, salvage excavations were undertaken near the marina of Ashqelon, prior to development works (map ref. 157977–8079/620709–812).[1] These excavations revealed two occupation strata that included mud-brick architecture, occupation surfaces, pits and other material culture remains that may be attributed to an early stage of EB I. The present excavations are a continuation of those carried out in Area E-2 in 1995 and 1996, during the construction of the marina and its adjacent structures (Golani 2004). These excavations revealed remains of numerous pits alongside fragmented remains of a developed metallurgical industry, identified upon the crest and the eastern slope of a local *kurkar* ridge. Remains of the Byzantine period, including a complete tomb that had been looted prior to its excavation, a winepress, and disjointed remains of a large building, were also identified in this area on the crest of the ridge (Golani and Milevski 1999; Wallach 2003; Golani 2004), and remains of the Roman period were excavated 100 m to the southwest of the present excavation (Israeli 1999). The present excavation area is adjacent to and east of the earlier excavation areas, continuing the earlier exploration of Area E-2 (Fig. 1). Though the terrain was significantly altered by extensive mechanical leveling operations, the ancient topography of the excavated area appears to have been that of a mild southeastern slope. The EB I remains were found upon this slope, which was cut into by several pits.

The Excavation

Twenty-four squares were opened on a northeast–southwest axis (Plan 1; Fig. 2) and numbered in accordance with the excavation grid and the numbering system used in the previous excavation of Area E-2. Most of the squares were excavated down to the sterile basal level, exposing two EB I occupation strata (III–II), both of which had been heavily damaged by intrusions of the Byzantine and more recent periods (Stratum I), including pits filled with loose sand and mechanically dug trenches. The northwestern portion of the excavation area was found to have been heavily disturbed by modern intrusions and

[1] The excavations (Permit No. A-6151), undertaken in Building Lot 4 on behalf of the Israel Antiquities Authority and underwritten by Afridar Building & Development Co. Ltd., were directed by the authors, with the assistance of Yasser Al-‘Amor and Ra‘ed Abu Halaf (administration), Vadim Essman and Yakov Shmidov (surveying), Yossi Nagar (physical anthropology), Anat Cohen-Weinberger (petrography), Inbar Ktalav (malacology), Alla Yaroshevich (flint processing), Elisabetta Boaretto (radiocarbon dating), Nuha Agha (faunal analysis), Assaf Peretz (field photography), Svetlana Talis (district archaeologist), Yigal Israel (regional archaeologist), Elisheva Kamaisky and Atalia Fadida (ceramic restoration), Irena Lidsky-Reznikov and Michael Smilansky (artifact drawing) and Clara Amit (artifact photography). For a preliminary report, see Golani and Paran 2014.

produced no *in situ* finds. Prior to the excavation, the entire area had been leveled using a fill composed of sediments taken from the earlier excavation. This activity often cut into the earlier strata. The northeastern extremity of the excavated area (Sqs K10, L10, K11 and L11) was heavily damaged by a large modern intrusion and produced no relevant *in situ* remains. This intrusion was also identified in the previous excavation of Area E-2 as a wide east–west swath, probably created by a bulldozer (Golani 2004:15; Plan 2). In the present excavated area, it was revealed that the Stratum III settlement was founded on a mild southeastern-facing slope composed of the basal sands, yet not covering them completely. The settlement of Stratum II covered that of Stratum III and large portions of it were also founded on the basal sands.

After most of the overlying modern fill across the excavation area was removed mechanically, excavations were conducted with standard hand tools using the balk/debris method in a 5 × 5 m grid with 1 m wide balks between the squares. The excavated material from EB I archaeological layers with clear stratigraphical significance and from the fills of pits was sifted through a 10 × 10 mm mesh.

Fig. 2. General view of the excavated area, looking southwest.

Stratum III (Plan 1)

Remains associated with the earliest settlement phase (Stratum III) were identified primarily in the central and southern portions of the excavated area, usually underneath remains associated with Stratum II. The Stratum III remains consist of disjointed fragments of mud-brick architecture and several pits. A portion of a mud-brick wall (W809/814) was revealed in Sqs G11 (Fig. 3) and F11 (Fig. 4). This wall, 0.7 m wide and preserved to 0.3 m in

Fig. 3. Wall 814 and Surface 617, looking southwest; stone concentration L541 (right) is associated with Stratum II.

Fig. 4. Wall 809, looking northeast; Surface 565 is to the right of the wall.

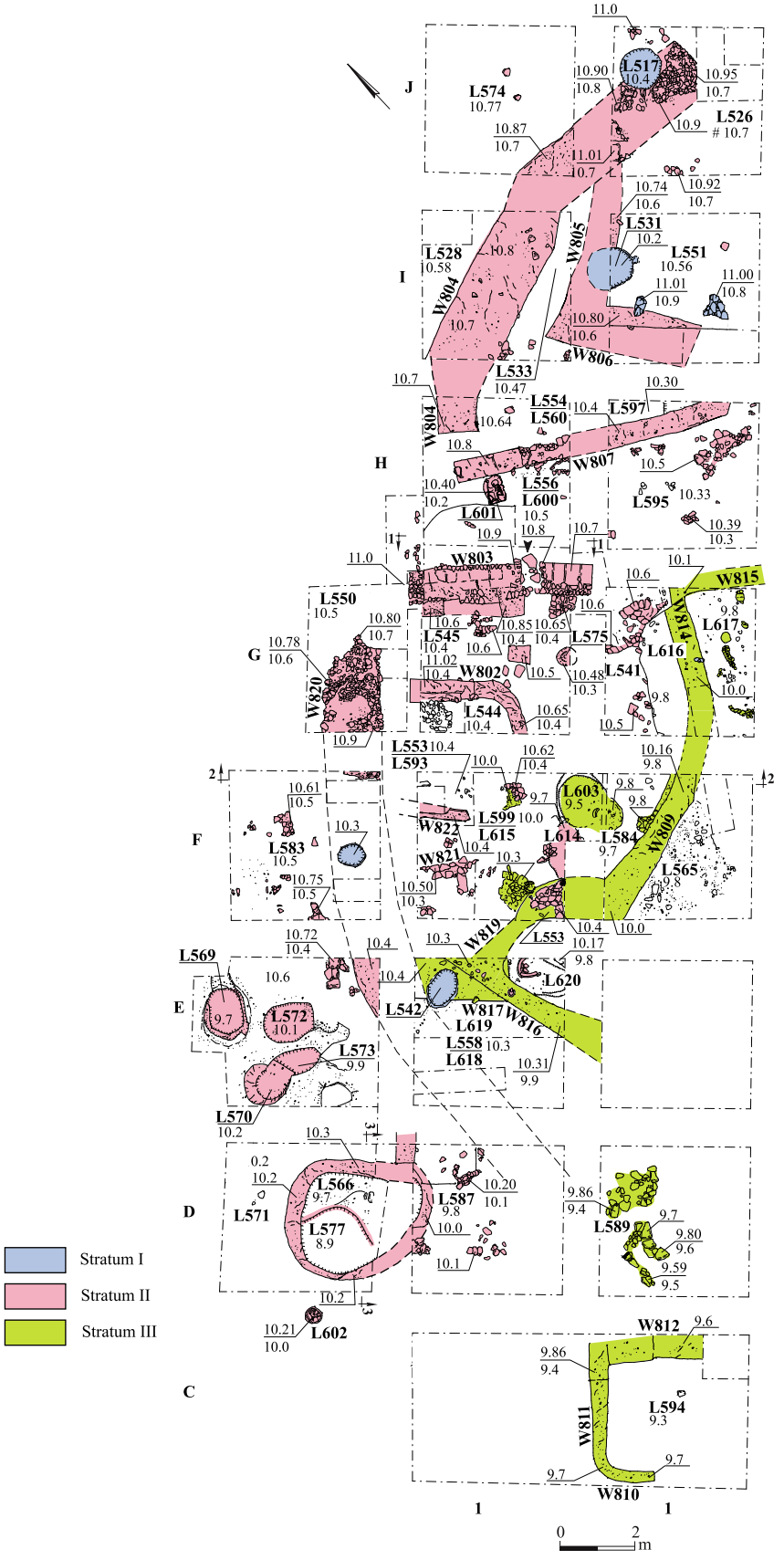

Plan 1. Area E-2, plan and sections.

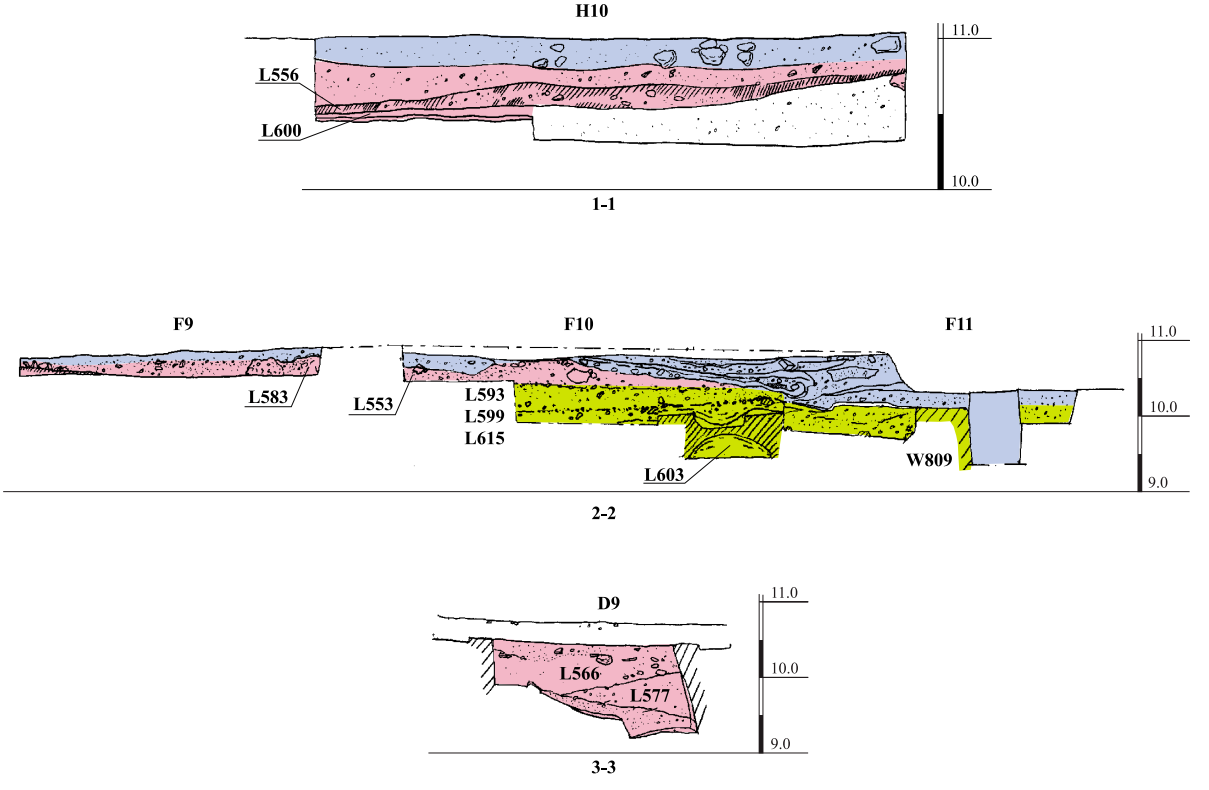

height, was identified primarily by its material, which was harder and slightly darker than the matrix of the soil surrounding it and had numerous *kurkar* inclusions. No mud-brick contours were identified in this wall; these may have melted into each other, or the wall may have been constructed of *terre pisée* and not of mud bricks. Though W809/814 was badly damaged by a mechanical trench, it can still be identified as slightly curving. At its northern end, W814 appears to make a corner with W815, the continuation of which was not exposed. Southeast of W814/809, in both Sqs G11 and F11, an occupation surface was identified with numerous small *kurkar* stones upon it (L617, L565) (Figs. 3, 4). A similar surface was identified to the northwest of this wall (L616, L584) and the rounded opening of a shallow, bell-shaped pit (L603) that had been cut into the basal sands (Fig. 5; Plan 1: Section 2–2) was integrated into it. In this pit, remains of spelt (*Triticum dicoccum*) were recovered, as well as barley (*Hordeum vulgare*) and domesticated lentil (*Lens culinaris*), grape (*Vitis vinifera*) and olives (*Olea europaea*).[2] A beaten-earth surface (L615) west of

[2] The archaeobotanical remains were identified by Ehud Weiss of Bar-Ilan University and will be fully presented in a forthcoming publication (Golani, forthcoming [a]).

Fig. 5. Pit 603, looking northeast.

Fig. 6. Surface 615 and L599 with burned mud-brick debris and stones over it, looking northeast; Stratum II Surface 553 at a higher level (right), and W819 (bottom, left) with stones of Stratum I Surface 553 above it.

this pit was overlaid by debris (L599) that included some burned mud-brick debris and small stones (Fig. 6; Plan 1: Section 2–2). At EB I Ashqelon, such debris is usually found in direct association with small circular cup-like installations of small stones and earth that are dug into the ground and exhibit signs of intense heating. These are often testimony for copper smelting (see Golani 2014a:122–125). All these surfaces and W814/809 were founded upon sterile sands that constituted the basal slope.

Additional remains of Stratum III that were uncovered in Sq E10 were difficult to define accurately. These included a portion of a mud-brick wall (W816/817), preserved to a height of one course, that was cut into by a later sand-filled pit of Stratum I (L542). To the south of this wall was a beaten-earth surface (L619; Fig. 7). At its northern end, W816/817 appears

Fig. 7. Surface 619 and W816/817 (left), looking southeast.

Fig. 8. Curving outer face of W819 and debris of L599 next to it (bottom, left), looking south; stones of Stratum II Surface 553 (center) directly overlay W819.

to have formed a corner with W819, which curves to the east in Sq F10 (Fig. 8) and may have connected to W809 in Sq F11.

Other remains associated with Stratum III were identified in the southern portion of the excavated area. Though no physical connection was established between these elements and those of Stratum III discussed above, their association with Stratum III is based on their position upon the basal sands and their relative elevation in relation to other elements of Stratum III. Among the remains in the southern portion of the excavation was a concentration of stones (L589, Sq D11) that included a complete *kurkar* grinding stone (Figs. 9; 35:4). The stones did not appear to form any architectural element but may be a building collapse or a deliberate concentration of building materials that was never used.

Other remains include a mud-brick structure identified in Sq C11. This U-shaped structure is composed of Walls 810, 811 and 812 (Fig. 10). Though none of these walls produced the outlines of mud bricks, they were identified by the harder material of which they were apparently built, suggesting they could have been constructed of *terre pisée* as well as dissolved mud bricks. Between these walls, a beaten-earth surface (L594) was identified.

Fig. 9. Stone concentration in Sq D11 (L589); note complete *kurkar* grindstone (bottom, center).

Fig. 10. Mud-brick structure of W810, W811 and W812 in Sq C11, looking northwest.

STRATUM II (Plan 1)

Remains of Stratum II were identified throughout the excavated area and covered a larger area than those of Stratum III. The main architectural features in Stratum II include a large architectural complex that may have been part of an enclosure in the northeastern and central portions of the excavated area and several pits found in the southwest.

In the north of the excavated area, the remains of a wide (1.85 m) and slightly curving mud-brick wall (W804) were revealed, which appears to have set off a large enclosed area (Fig. 11). Wall 804 was exposed for 11.5 m, running from Sq J11, through Sq I10 and ending in Sq H10. The construction of W804 was stabilized with sporadic stones or stone concentrations, and the partial contours of individual mud bricks were only occasionally identified. At its northeastern end, the wall appears to have been based on a layer of small stones and was cut by a Stratum I pit (L517; Fig. 12). In Sq J11, adjacent to and south of this stone layer, was a patch of a beaten-earth surface (L526) that may have been associated with this wall.

Beaten-earth Surfaces 574 and 528 were exposed to the north of the wall and adjacent to it; they were associated with its base and constructed upon the basal sands. The southwestern end of W804 was squared, forming an entranceway with W807 (Fig. 10). This latter wall, traced for 7.5 m, was much narrower, only 0.6 m wide, and was also built of mud bricks interspersed with stones. To the south of W807, beaten-earth Surfaces 595 and 556/600 were identified, and upon them were numerous small stones (Figs. 13, 14; Plan 1: Section 1–1). A left humerus of a human adult whose sex could not be determined was revealed upon Surface 556/600 and next to W807 (see Nagar, this volume).

Fig. 11. Large enclosure W804 and W807 at its southwestern end, aerial view to the northeast.

Fig. 12. Northeastern end of W804, looking southwest; Stratum I circular pit (L517; right) cuts through the wall and into basal sands.

Fig. 13. Surface 595 and W807, looking northeast.

Surface 556/600 was partially removed to reveal the remains of an infant jar burial positioned next to and below the base of W807 (Fig. 14). The burial consisted of a large and complete holemouth jar lying on its side upon the basal sands (Figs. 15; 31:1). Removal of the jar's upper portion exposed the fragmented remains of an infant lying on a north–south axis in a flexed position on its left side with the head in the north facing west (Fig. 16; see Nagar, this volume). No burial goods were found associated with this burial.

Fig. 14. Surface 556 (bottom, right) next to W807 (center, right), looking northeast; entranceway between W807 and W804 not yet exposed, and remains of a partially uncovered burial jar below the surface level.

Fig. 15. Jar burial in L601, looking northeast.

Fig. 16. Jar burial in L601 during excavation, looking northeast.

The area bounded by W804 and W807 produced a limited amount of disjointed architectural remains. These included the very partial remains of two conjoined walls, W805 and W806, that appear to represent a portion of a structure of unclear plan. Both these walls were built of mud-brick material, yet heavily damaged by modern and ancient intrusions that precluded the identification of any clear mud bricks. Between W804 and W805 (Sq I10) was a partial beaten-earth surface (L533) that continued into the adjacent square (H10) as L554/560 and as L597 in Sq H11, all found adjacent to and north of W807. Between W806 and W805 was a beaten-earth surface (L551) that was heavily damaged by a Stratum I pit (L531), which cut into both W805 and Surface 551.

More architectural elements were identified adjacent to and southwest of the remains described above. In Sq G10, the remains of two parallel mud-brick walls (W803, W802) were exposed. Both were found to end along the same northeast–southwestern axis. Wall 802 ended 0.75 m southeast of a large concentration of stones that may have represented the badly eroded remains of another, large wall (W820; Fig. 17), which may be seen as a continuation of W804, the large enclosure wall (see above). Next to the northeastern end of W820 was a patch of a beaten-earth surface (L550). The supposed continuation of W820 to the southwest was not clearly apparent, as much of this area was badly damaged by modern and ancient intrusions, yet two concentrations of mud-brick material in Sqs F9 and E9 may represent scant remains of this suggested wall.

Wall 803, built of mud bricks preserved three courses high, was exposed for a length of 4.9 m. A single row of small stones was found arranged along this wall's northeastern face. These stones were not laid at the base of the wall, so they do not constitute a foundation course; rather, they were placed upon the outer edge of the third mud-brick course from the

Fig. 17. Eroded remains of possible W820, looking southeast.

bottom. A similar arrangement was revealed in the northwestern edge of the wall that was squared with a triple row of small stones (Fig. 18), as well as the long southwestern face, lined with a double row of small stones (Fig. 19). This construction feature was probably intended to stabilize and strengthen the mud bricks and to facilitate applying plaster or mud coating, which may have covered the wall in the past.

An entranceway revealed in W803 was purposefully blocked in the past by a heap of stones. Like the walls, the entranceway was also squared off by a line of small stones incorporated into the edge of the wall. Three engaged pillars were incorporated into the southwestern face of W803: two comprised mud bricks incorporating a few small stones, and one was entirely built of small stones (Figs. 20, 21).

Fig. 18. Wall 803, looking southeast; wall width is outlined by two parallel rows of stones on either side of the scale stick; note its squared-off northeastern end (bottom, center).

Fig. 19. Southeastern extension of W803, looking southwest; mud-brick outlines are faintly visible near the scale stick; entranceway and stone facing (right).

Fig. 20. Square G10, looking north; three engaged pillars of W803 (top), beaten-earth Surface 545 (center) and W802 in the foreground.

Fig. 21. Square G10, W802 (left) and W803 (right), looking northwest.

In the area between W803 and W802, a beaten-earth surface (L545) was associated with the bases of both walls (Figs. 20, 21). On this surface was a concentration of small to medium-sized stones, as well as a small square mud-brick platform or pillar base, suggesting that the area between W802 and W803 was once roofed over. Adjacent to it was a large chunk of unworked Eocene flint. As the closest Eocene outcrops are located in the Judean Shephelah, at least 25 km to the east, this flint block was undoubtedly imported to the site. Further to the southeast of the square mud-brick platform or pillar base was a round mud-brick installation (L575) with a deep cupmark in its center (Fig. 22). Both this installation and the mud-brick platform are aligned along an axis parallel to W803 and W802, suggesting that they may have functioned as pillar bases.

Wall 803 was constructed of brown mud bricks and small stones, but W802 was built in a different fashion, from light gray-brown mud bricks with numerous *kurkar* chips and almost no stones. This badly eroded, curving wall was preserved to a height of three courses (Figs. 20, 21). A beaten-earth surface (L544) and an accumulation of small stones was found east of W802.

In Sq G11, a few stone concentrations (L541) were found (Fig. 3) that did not follow a coherent plan and may also be associated with Stratum II. In Sq F10, the Stratum II remains included several concentrations of stones and mud bricks, some of which appear to represent fragmented architectural remains (W821, W822) that were badly damaged by later intrusions (Fig. 23) and do not enable a reconstruction of their original plan. These elements were associated with a beaten-earth surface (L593) overlaid by debris (L553; Figs. 23, 24; Plan 1: Section 2–2) that was identified upon the Stratum II level throughout the

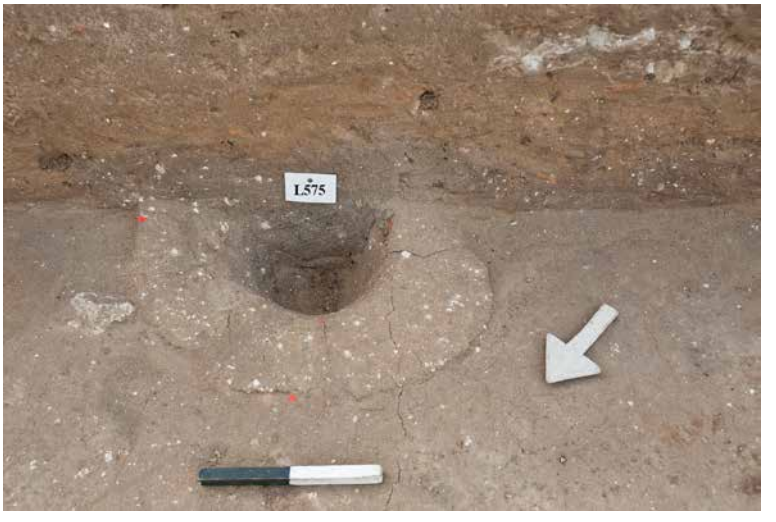

Fig. 22. Rounded mud-brick installation (L575) embedded into Surface 545 between W803 and W803, looking southeast.

Fig. 23. Stratum II, Sq F10, occupation level L553/593, looking northwest; note fragmented architectural features W821 and W822 (top).

square. Part of a pit (L614) was identified next to an earlier Stratum III pit (L603) cutting down from the L593 surface. The same beaten-earth surface, which included scattered stones and sherd concentrations, was also identified in the adjacent Sqs F9 (L583) and E10 (L558/618; Fig. 25).

Fig. 24. Occupation level L553/593, looking northwest; note base of copper smelting installation (center, left) and remains of burned sherds (right).

Fig. 25. Concentration of crushed sherds on Stratum II Surface 558/618, looking southwest.

In the southwestern part of the excavated area (Sqs D–E9), a concentration of several pits was revealed (Figs. 26–29). Much of this area was razed down to the basal sands by bulldozing. These pits are located outside and west of the supposed line of W820 and are identical in character to the numerous pits revealed in the earlier excavation of adjacent Area E-2 (Golani 2004; see Fig. 1). Four pits were revealed in Sq E9 (L569, L570, L572 and L573; Figs. 26, 27); all were dug into the sterile basal sands of the slope. Patches of dense light-cream or brown-gray sands with numerous calcite concretions were found in between the pits. This material was often identified as the preferred material for mud bricks in many of the excavated areas at Ashqelon. The source of the patches found here is probably a modern fill dumped over the excavated area when the area to the west, the first excavation of Area E-2, was dismantled.

Except for Pit 569, whose upper part is narrower than its lower part, thus creating a bell-shaped section, the other pits were of rounded or elliptical cup shape and were all found full of dark-brown soil containing numerous finds (Fig. 27). Pit 573 appears to have cut into Pit 570. In Sq D9, a large rounded pit was uncovered (Fig. 28); its outer rim was ringed by a lining of dense light-cream or brown-gray sands with numerous calcite concretions, next to which were the scattered remains of an occupation surface (L571). The pit walls were vertical and the southwestern portion of the pit (L577) was deeper than its northeastern one

Fig. 26. Concentration of pits in Sqs D–E9, looking southwest.

Fig. 27. Pits in Sq E9, looking southeast.

Fig. 28. Large pit in Sq D9, looking southeast; note the pit's stepped interior and dark-brown debris filling.

Fig. 29. Base of ceramic vessel (L602) embedded in sterile sands, looking northeast.

(L566), creating a stepped interior (Plan 1: Section 3-3).[3] Fragmentary remains of the pit's circumference were identified in Sq D10, associated with sparse remains of an occupation level (L587) upon which numerous small stones were scattered.

Immediately to the southwest of this pit, the lower portion of a ceramic vessel was revealed (L602; Fig. 29), containing a concentration of sherds and small stones. Its missing upper part was probably shaved away by modern bulldozing.

Stratum I (Plan 1)

Stratum I comprises all remains later than Stratum II, including various modern intrusions and other features, usually pits of rounded or irregular form that had been cut into the earlier remains and were found full of light brown sand. Some of these pits may have been natural, caused by erosion and animal burrows, yet others, such as L517 (Sq 511), appear to have been deliberate. They may be attributed to the Byzantine occupation in this region, as attested in the previous excavation of nearby Area E-2.

The Finds

The Ceramic Assemblage (Figs. 30–34)

A small amount of Early Bronze Age pottery was associated with occupation Strata III and II. The pottery was examined and sorted in the field, except for that from loci destined for restoration, which was kept in its entirety. Remaining sherds from the latter were sorted after ceramic restoration was completed. The present assemblage is dominated by sherds and only one vessel, a holemouth jar containing an infant burial (Fig. 31:1), was fully restorable. In sorting, all non-diagnostic body sherds were discarded, while all rims, bases, handles and other sherds indicating a specific form, manufacturing or decorative technique were kept. At a later stage, during the detailed examination and formulation of the stratigraphy, the context and content of the various loci were reexamined. Many of the loci were then excluded from the study as they could not be associated with certainty with either of the two strata, leaving a characteristic ceramic assemblage for each stratum (see Appendix 1). The ceramic repertoires associated with these strata are very similar to one another. This was already noticed during excavation, so that the ceramic finds were not a factor in the stratigraphic differentiation between the loci. The two strata are therefore presented separately in the figures yet discussed as one assemblage in the text.

[3] Archaeobotanical remains identical to those found in Pit 603 (see above) were also recovered from Pit 577. The remains were identified by Ehud Weiss and will be included in a forthcoming publication (Golani, forthcoming [a]).

Technology

Due to the relatively low firing temperature of the ceramic vessels, along with the salinity and abrasive nature of the surrounding soil matrix, the vast majority of the pottery recovered was very worn and crumbly. The material was so friable that in the field it was only "dry cleaned", as immersion in water would have caused many of the sherds to disintegrate into mud.

The pottery was all handmade. Some of the bowls appear to have been manufactured on a tournette, as evidenced by string-cut bases (Figs. 30:10; 34:8) and horizontal wheel marks on the body. The coil method appears to have been predominant in the production of most ceramic forms. Bases are the most numerous of the diagnostic sherds recovered. Except for juglets (e.g., Fig. 34:6), nearly all the vessels have flat bases, none of which were found with traces of mat impressions.

Many of the vessels bear faint traces of a red slip or wash and a few retain remnants of burnish. Of the bowl assemblage, only one was found with traces of burnish (Fig. 32:11). Nonetheless, surface treatment may have been more predominant, as most of the red color and burnish had probably worn off due to the alkaline nature of the soil. Plastic decoration, usually in the form of small, consecutive indentations made by thumb or by an implement of similar size, on or just below the rim (here termed a scalloped, pie-crust or thumb-indented rim), is common on bowls, holemouth jars, store jars and ledge handles. The fabric of all the ceramic fragments appears to have been local, made of *ḥamra* or loess soils; none of the fragments appears to represent an import.[4] The remains of a firing chamber of a kiln identified in Area J at Ashqelon, Afridar Stratum VI (Baumgarten 2004:167, Fig. 6) and dated to EB IA indicate that most, if not all, of the vessels were locally produced.

Typology

The typological designations used in this report follow those formulated during the processing of the ceramic assemblage of Ashqelon, Afridar Area E (Golani 2004) and later continued in the publication of Ashqelon, Afridar Area M (Golani 2008) and Area N (Golani 2014a; forthcoming [c]) and Ashqelon, Barneʿa (Golani, forthcoming [a]). Lacunae in the typological sequence simply indicate the absence of a certain form in the present ceramic assemblage. The pottery may be generally divided into three major groups: bowls (Figs. 30, 32), holemouth jars (Figs. 31:1–3; 33:1–8) and store jars (Figs. 31:5–8; 33:9–15).

Bowls

Type BIa: V-Shaped Bowls with Tapering or Rounded Rim (Figs. 30:1–8; 32:1–9).— The simple V-shaped bowl is one of the most common forms found in both strata. Examples range from delicate thin-walled forms to forms with thicker walls. The rims are generally straight and tapering or rounded. A few of the bowls retain remnants of a red wash on both

[4] The ceramic fabrics were examined by the naked eye by Anat Cohen-Weinberger, IAA petrographist.

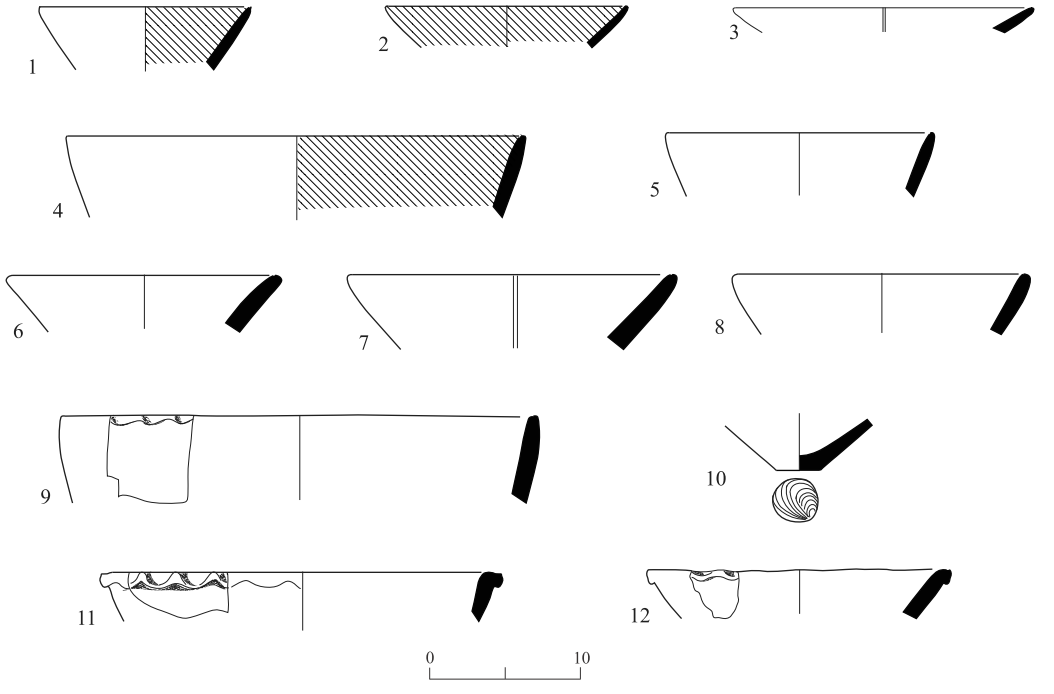

Fig. 30. Stratum III: bowls.

No.	Type	Locus	Basket	Description
1	BIa	603	5187	Light brown clay, light brown core, small to medium-sized white grits, remains of red wash on int., poorly fired
2	BIa	603	5187	Light brown clay, light brown core, small to medium-sized white grits, red wash on int. and ext., poorly fired
3	BIa	603	5193	Light brown clay, light brown core, small to medium-sized white grits, poorly fired
4	BIa	615	5203	Light brown clay, light brown-gray core, small to medium-sized white grits, remains of red wash on int., medium fired
5	BIa	610	5197	Light brown-yellow clay, light brown-gray core, small white grits, medium fired
6	BIa	603	5193	Light brown clay, light brown core, small to medium-sized white grits, well-fired
7	BIa	610	5197	Light brown clay, light brown core, small to medium-sized white grits, medium fired
8	BIa	610	5197	Light brown clay, light brown core, small to medium-sized white grits, poorly fired
9	BIb	610	5197	Light-brown clay, light brown core, small to medium-sized white grits, thumb-indented decoration on rim, poorly fired
10	String-cut base	603	5187	Light-brown clay, light brown-gray core, small to medium-sized white grits, faint remains of thumb-indented decoration on rim, poorly fired
11	BVI	599	5174	Light brown clay, dark gray core, small to medium-sized white and gray grits, thumb-indented decoration on rim, medium fired
12	BVI	610	5197	Light brown clay, light brown core, small to medium-sized white grits, thumb-indented decoration on rim, poorly fired

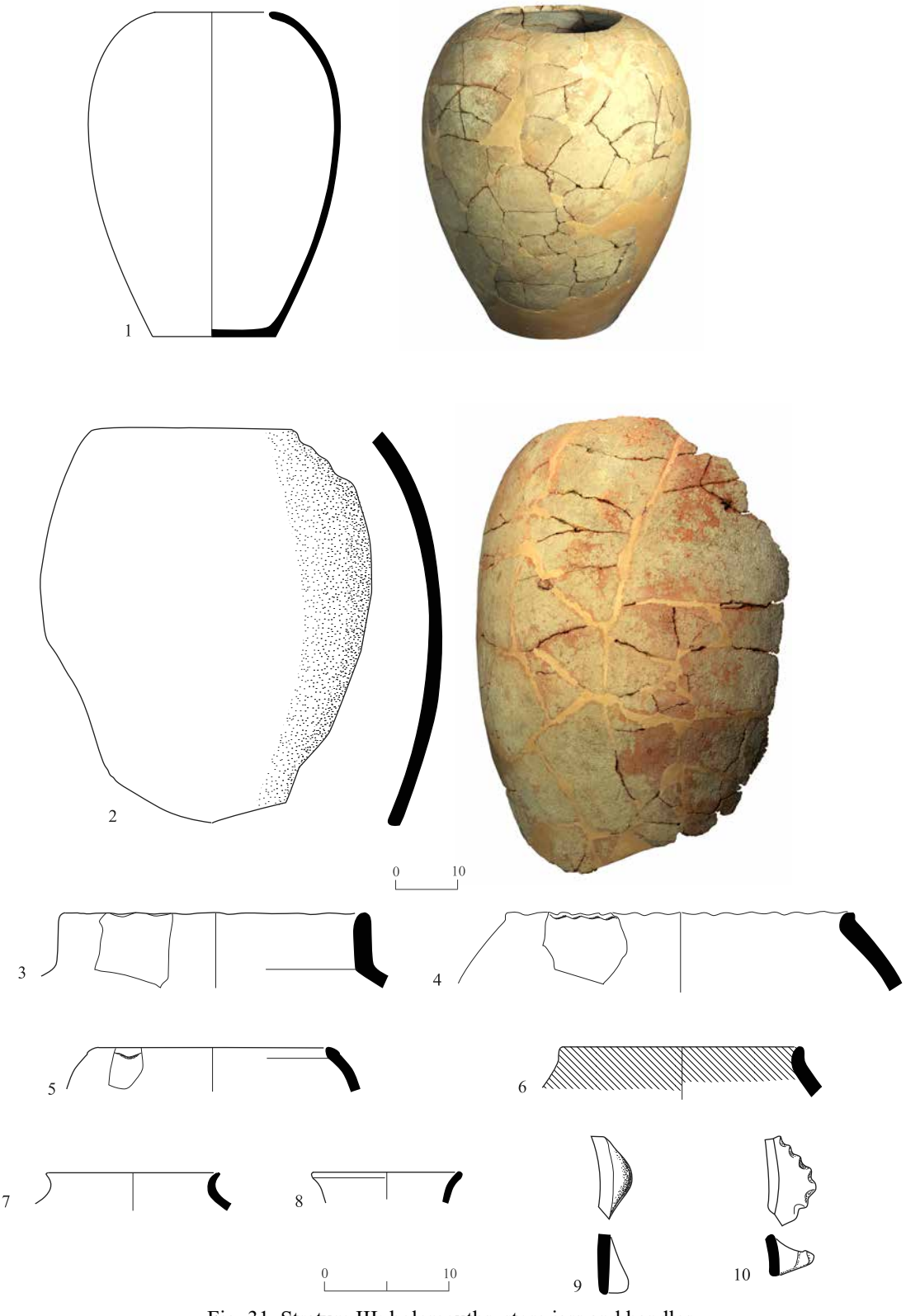

Fig. 31. Stratum III: holemouths, store jars and handles.

◂ **Fig. 31**

No.	Type	Locus	Basket	Description
1	HI Holemouth	601	5183	Light brown clay, light gray-brown core, small to large white grits, poorly fired
2	Cover of infant burial	601	5183	Light brown clay, light gray-brown core, small to large white grits, poorly fired
3	HIVa Holemouth	610	5197	Brown clay, brown core, small to medium-sized white grits, poorly fired
4	HV Holemouth	615	5203	Light brown clay, light brown core, small to medium-sized white grits, thumb-indented decoration on rim, medium fired
5	SJIII Store jar	615	5203	Light brown clay, dark brown core, small to medium-sized white grits, poorly fired
6	SJVII Store jar	603	5187	Light brown clay, light gray-brown core, small white grits, red wash on int. and ext., medium fired
7	SJVII Store jar	617	5209	Light brown clay, light brown core, small to medium-sized white grits, poorly fired
8	SJVII Store jar	603	5193	Light brown-gray clay, light gray core, small to medium-sized white grits, poorly fired
9	LHI Ledge handle	617	5205	Light brown clay, dark gray core, small to medium-sized white grits, poorly fired
10	LHII Ledge handle	617	5205	Light brown clay, dark gray core, small to medium-sized white grits, thumb-indented decoration on edge, poorly fired

their exterior and interior, yet none bear a decorative red band on the rim, a distinctive feature of the Chalcolithic period.

The Chalcolithic-period V-shaped bowls continued in use throughout EB I, as attested in previous excavations with EB IA settlement remains, such as at Ashqelon, Afridar Area E (Golani 2004: Fig. 22:1–9), Area F Strata II–I (Khalaily 2004: Type B1, Figs. 6:5; 11:1–3, 5–16), Area J Strata 6–5 (Baumgarten 2004: Figs. 9:1; 10:1, 2; 15:2), Area G (Braun and Gophna 2004: Fig. 17:1, 3, 4, 6, 7) and Area M (Golani 2008: Fig. 8:1–8), as well as other EB IA sites such as Niẓẓanim Stratum 5 (Yekutieli and Gophna 1994: Fig. 12:16, 18, 19).

Type BIb: V-Shaped Bowls with Squared-Off Rim (Figs. 30:9; 32:10).— These thick-walled vessels have a simple rim that appears to have been squared off. Though this form is not common in the present assemblage, it is found in both Strata III and II.

Type BII: V-Shaped Bowls with Red Slip and Burnish (Fig. 32:11).— These bowls have a simple tapering rim and a characteristic thick red slip or wash and burnish on their exterior and interior. Though the burnish is not evenly executed, it is usually oriented in one direction, either vertically, horizontally or diagonally. A complete profile of this type was recovered from Stratum II.

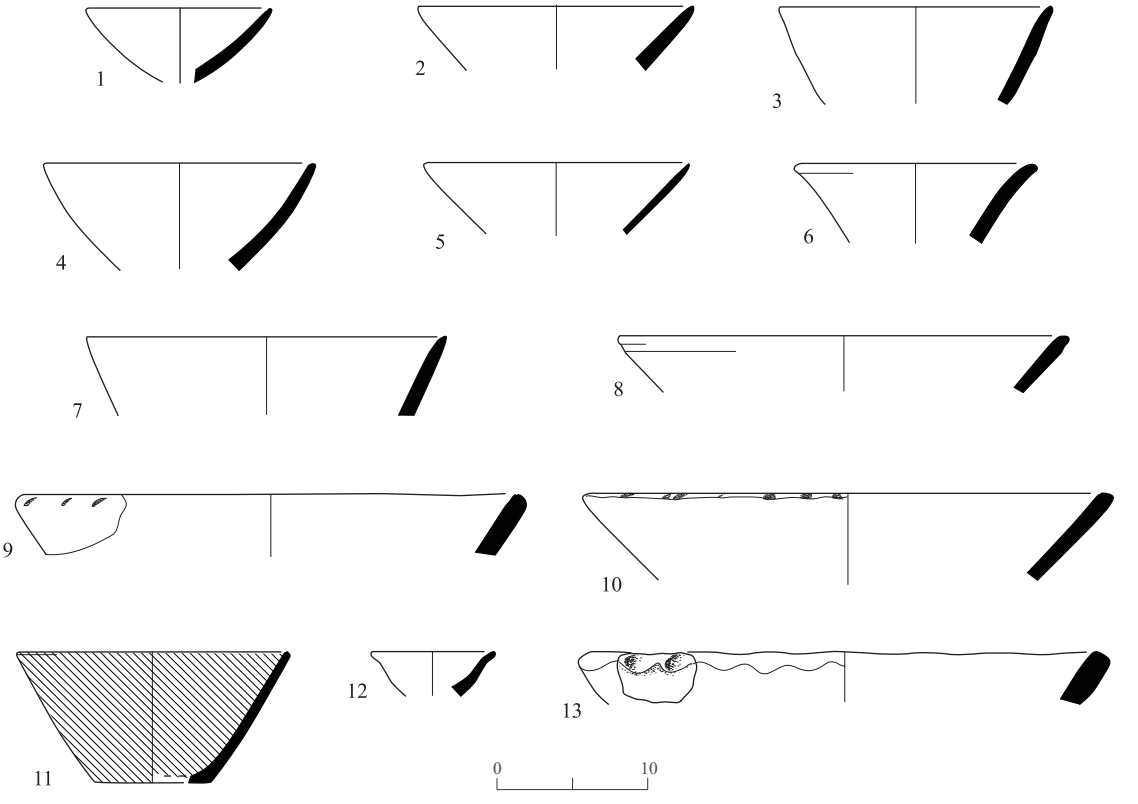

Fig. 32. Stratum II: bowls.

No.	Type	Locus	Basket	Description
1	BIa Bowl	577	5756	Light brown clay, light brown-gray core, small to medium-sized white grits, well-fired
2	BIa Bowl	569	5128	Light brown clay, light brown-gray core, small to medium-sized white grits, medium fired
3	BIa Bowl	583	5151	Light brown clay, light brown-gray core, small to medium-sized white grits, medium fired
4	BIa Bowl	577	5147	Light brown clay, brown-gray core, small white grits, poorly fired
5	BIa Bowl	577	5147	Light brown clay, brown core, small white grits, medium fired
6	BIa Bowl	583	6152	Light brown clay, brown-gray core, small to medium-sized white grits, medium fired
7	BIa Bowl	528	5058	Light brown clay, light brown-gray core, small white grits, well-fired
8	BIa Bowl	577	5137	Light brown-red clay, brown core, small to medium-sized white grits, poorly fired
9	BIa Bowl	596	5181	Light brown-red clay, light brown-red core, small to medium-sized white grits, faint remains of thumb-indented decoration on rim, medium fired
10	BIb Bowl	569	5178	Light brown clay, light brown-gray core, small to medium-sized white grits, faint remains of thumb-indented decoration on rim, poorly fired
11	BII Bowl	569	5144	Light brown clay, light brown core, small white grits, remains of red wash and burnish on int. and ext., medium fired
12	BV Bowl	583	5151	Light brown clay, light brown core, small to medium-sized white grits, poorly fired
13	BVI Bowl	550	5096	Light brown clay, light brown core, small to medium-sized white grits, thumb-indented decoration on rim, poorly fired

This type of bowl is well-known in the southern Shephelah and coastal region during EB IA. Such vessels have been found at Taur Ikhbeineh Phases IV–III (Oren and Yekutieli 1992: Fig. 10:23, 24), Azor Stratum I (Golani and Brink 1999: Fig. 5:1), Tel ʻErani Area DII Layer D (Yekutieli 2001: Fig. 33:8), Site H in Wadi Ghazzeh (Roshwalb 1981: Fig. H.4.:8), Tel Lakhish Cave 1503 (Tufnell 1958: Pl. 56:28) and Ashqelon, Afridar Area E (Golani 2004: Fig. 22:10–13). The red slip and burnish decorative tradition evident on such bowls has been attributed to a late phase of the early EB I (EB IA_2; see Yekutieli 2000:131). Red slip and burnish decoration are typical Egyptian ceramic traits, suggesting that this practice may have been introduced as a result of Egyptian influence (Yekutieli 2000:150).

Type BV: Hemispherical Bowls with Flaring (Sinuous) Rim (Fig. 32:12).— These are small to medium-sized hemispherical bowls with an outflaring, tapering rim. Only one example of this form was found, associated with Stratum II. Similar bowls are known from Chalcolithic and EB I contexts: at Abu Maṭar Stratum III (Commenge-Pellerin 1987: Fig. 18:6) and Site O in Wadi Ghazzeh (Roshwalb 1981: Fig. O.5.:4) they are dated to the Chalcolithic period; and at Ashqelon, Afridar Area E (Golani 2004: Fig. 23:3, 5), Area F Stratum I (Khalaily 2004: Fig. 6:7), Area J Stratum VI (Baumgarten 2004: Fig. 9:2), Lakhish Caves 1517, 1534 and 1509 (Tufnell 1958: Pl. 56:1, 12, 14, 23), Tel Ḥalif Terrace Phases 8–10 (Dessel 2009: Figs. 10:12, 25; 13:18; 14:1–6; 20:32) and Site H in Wadi Ghazzeh (Roshwalb 1981: Fig. H.4.:17–21) they are dated to EB IA.

Type BVI: Large and Thick V-Shaped Bowls with Straight Walls and Pie-Crust Decoration (Figs. 30:11, 12; 32:13).— Two subtypes of this form were discerned: those with a scalloped decoration on the outer edge of a slightly out-turned, folded-over or beveled rim (Type BVIb; Fig. 30:11, 12), which are found in Stratum III; and those with the same decoration directly upon the edge of the rim (Type BVIa; Fig. 31:13), found in Stratum II. Both forms are known during the Chalcolithic period and EB I. From the Chalcolithic period, they are found at Shiqmim Phase BP II (Levy 1987: Figs. 12.3:1; 12.6:1) and Abu Maṭar (Commenge-Pellerin 1987: Fig. 21:4), and from EB IA—at Ashqelon, Afridar Area E (Golani 2004: Figs. 8:10; 23:9–11), Area F Stratum II (Khalaily 2004: Figs. 6:6, 9–11; 12:2, 4, 5) and Area G (Braun and Gophna 2004: Fig. 17:11–13), and at Niẓẓanim Stratum 4 (Yekutieli and Gophna 1994: Fig. 11:18), Taur Ikhbeineh Phases IV–III (Oren and Yekutieli 1992: Fig. 10:14), Azor Stratum I (Golani and Brink 1999: Fig. 5:11, 12), Site H in Wadi Ghazzeh (Roshwalb 1981: Fig. H.4.:15) and Tel Ḥalif Terrace Phases 9–10 (Dessel 2009: Figs. 7:3, 6; 8:9). Type BVI bowls are probably to be seen as diagnostic of both the Chalcolithic period and EB IA.

Holemouth Jars

Type HI: Plain Holemouth Jars with Tapering Rim (Figs. 31:1; 33:1, 2).— This is one of the most common forms of holemouth jars in the Chalcolithic period and EB I. It is known from Chalcolithic contexts such as Shiqmim Phase BP II (Levy 1987: Fig. 12.11:6) and

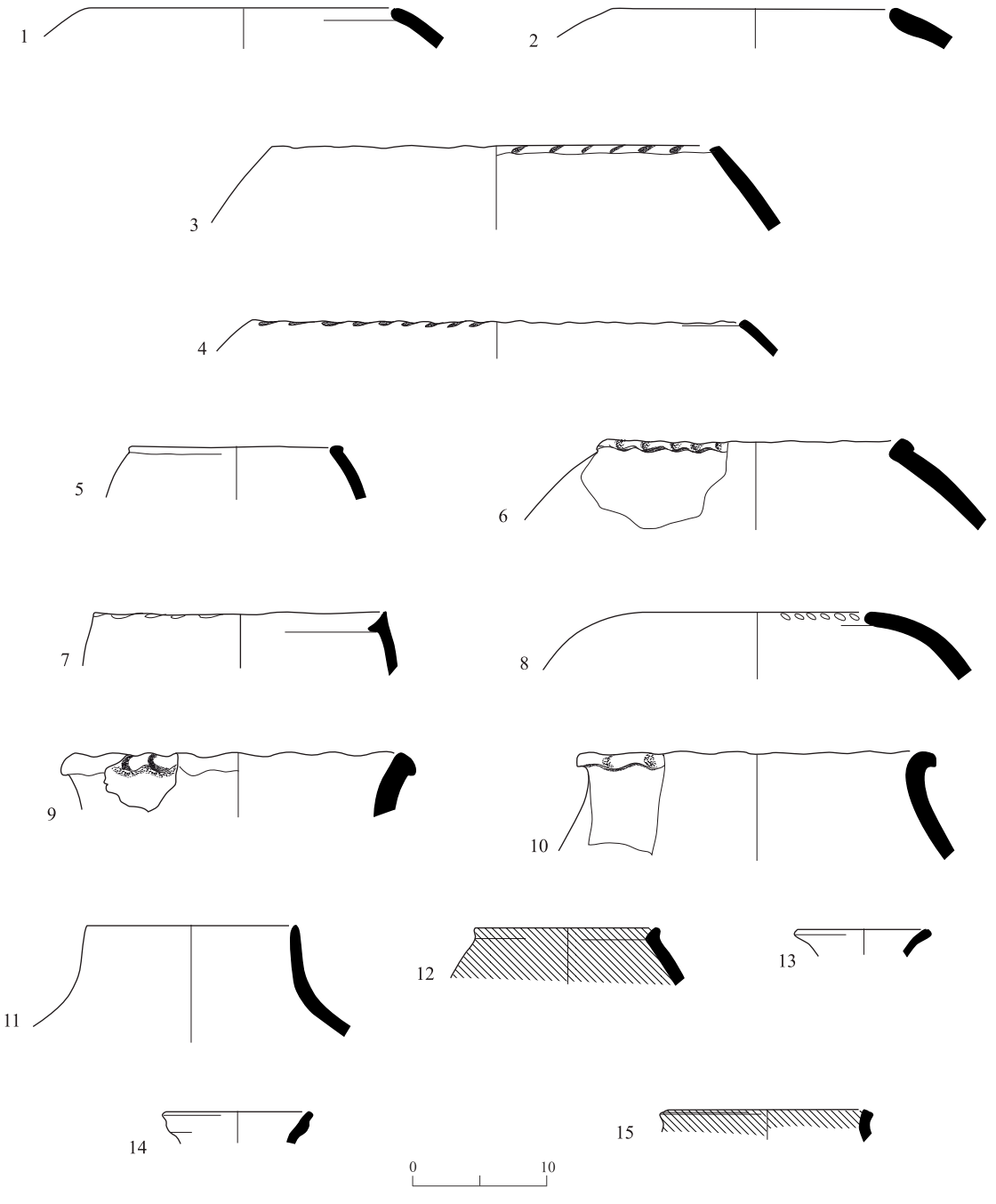

Fig. 33. Stratum II: holemouths and store jars.

◂ **Fig. 33**

No.	Type	Locus	Basket	Description
1	HI Holemouth	569	5128	Light brown clay, light gray-brown core, small to large white grits, medium fired
2	HI Holemouth	574	5143	Light brown clay, light gray-brown core, small to large white grits, medium fired
3	HII Holemouth	569	5128	Light brown clay, light gray-brown core, small to large white grits, thumb-indented decoration on rim, well-fired
4	HII Holemouth	569	5144	Light brown-red clay, gray-brown core, small to large white grits, thumb-indented decoration on rim, medium fired
5	HV Holemouth	583	5151	Dark brown-gray clay, dark gray-brown core, small to medium-sized white and gray grits, thumb-indented decoration on rim, medium fired
6	HV Holemouth	577	5147	Brown-gray clay, gray-brown core, small to medium-sized white grits, thumb-indented decoration on rim, poorly fired
7	HV Holemouth	577	5147	Light gray-brown clay, light gray-brown core, small to medium-sized white and gray grits, thumb-indented decoration on rim, medium fired
8	HVI Holemouth	569	5144	Light brown clay, light gray-brown core, small to sized white and gray grits, thumb-indented decoration on rim, medium fired
9	SJII Store jar	583	5151	Light brown clay, light brown core, small to medium-sized white and gray grits, medium fired
10	SJII Store jar	583	5191	Light brown clay, light gray-brown core, small to medium-sized white grits, thumb-indented decoration on rim, medium fired
11	SJIII Store jar	569	5128	Light brown clay, brown core, small to large white grits, well-fired
12	SJVII Store jar	545	5085	Light brown clay, light-gray core, small white grits, red wash on int. and ext., poorly fired
13	Jar(?)	554	5097	Light-brown clay, light-brown core, small white grits, poorly fired
14	Jar(?)	574	5153	Light brown clay, light brown core, small white grits, medium fired
15	Jar(?)	577	5137	Light brown clay, light gray-brown core, small white grits, red wash on int. and ext., well-fired

Abu Maṭar (Commenge-Pellerin 1987: Figs. 27:1; 28:4, 5, 7, 9, 10). Examples dating from EB I are known from Niẓẓanim Strata 5 and 3 (Yekutieli and Gophna 1994: Figs. 10:7; 12:14, 15), Tel Ḥalif Terrace Strata IV–III (Alon and Yekutieli 1995: Figs. 23:12, 15; 24:5), Taur Ikhbeineh Phases V–IV (Oren and Yekutieli 1992: Fig. 11:12, 15) and Tel ʻErani Area DII Layer D (Yekutieli 2001: Fig. 33:3). The infant burial associated with Stratum III was found within this type of holemouth jar.

Type HII: Holemouth Jars with Truncated Rim (Fig. 33:3, 4).— The rim of this type is squared off or truncated, at times with a rope decoration upon or below it. Such holemouth jars are not indicative of the Chalcolithic period but they are common throughout EB I as at Niẓẓanim Stratum 5 (Yekutieli and Gophna 1994: Fig. 12:13), Ashqelon, Afridar Area F

Strata II–I (Khalaily 2004: Figs. 7:4; 14:2, 8) and Tel Ḥalif Terrace Stratum III (Alon and Yekutieli 1995: Fig. 23:10). In the present excavation they were found primarily in Stratum II.

Type HIVa: Holemouth Jars with Ridged Rim (Thickened on the Outside) (Fig. 31:3).— These holemouth jars may be seen as characteristic of EB IA. They appear, for example, at Ashqelon, Afridar Area G (Braun and Gophna 2004: Fig. 20:8, 14, 15), Area F Stratum I (Khalaily 2004: Fig. 7:7, 10), Area E (Golani 2004: Fig. 25:4–8) and Tel ʻErani Layer D (Yekutieli 2001: Fig. 33:6). This form is absent from EB IB contexts. In the present excavation it was found in Stratum III.

Type HV: Holemouth Jars with Sculpted Rim (Figs. 31:4; 33:5–7).— These holemouth jars have a thickened, truncated rim that is often upturned or slightly protrudes inward and outward, exhibiting a "hammerhead" profile. Some of the rims are decorated with shallow thumb indentations. Though antecedents may be found in the Chalcolithic period, as at Site M in Wadi Ghazzeh (Roshwalb 1981: Fig. M.4.:18) and Abu Maṭar (Commenge-Pellerin 1987: Fig. 24:4, 5 [denoted as basins]), this distinctive form is more common in EB IA in the southern Shephelah and the coastal plain. Examples are found at Azor Strata II–I (Golani and Brink 1999: Figs. 6:3–9; 11:3–6), Ashqelon, Afridar Area E (Golani 2004: Fig. 26:1, 2), Area F Stratum II (Khalaily 2004: Fig. 14:3), Area J Stratum 6 (Baumgarten 2004: Fig. 15:6) and Area M Stratum I (Golani 2008: Fig. 9:8). Yekutieli has assigned this type to the later phase of EB IA (EB IA_2; Yekutieli 2001:31–34).

Type HVI: Holemouth Jars with Scalloped Rim (Fig. 33:8).— These are holemouth jars with a simple tapering rim bearing a thumb-indented scalloped or pie-crust decoration at its edge. Though this form first appeared during the Chalcolithic period, as seen, for example, in Shiqmim Phase BP II (Levy 1987: Fig. 12.8:3) and Abu Maṭar (Commenge-Pellerin 1987: Fig. 26:9), it is much more common during EB IA in the southern Shephelah and coastal region, as seen at Site H in Wadi Ghazzeh (Roshwalb 1981: Fig. H.5.:3) and at Ashqelon, Afridar Area E (Golani 2004: Fig. 26:5–10), Area F Strata II–I (Khalaily 2004: Figs. 7:6, 8, 12; 14:7), Area J Strata 5–3 (Baumgarten 2004: Figs. 10:14; 11:16, 17; 12:7, 8; 16:5), Area G (Braun and Gophna 2004: Fig. 20:8–13) and Area M Stratum II (Golani 2008: Fig. 8:13–17).

Store Jars

Type SJII: Thick-Walled Pithoi with Sloping Shoulders, Vertical Neck and Out-Turned Rim with Thumb Indentations (Fig. 33:9, 10).— This form is common in southwestern Canaan during EB IA and is known, for example, from Azor Stratum I (Golani and Brink 1999: Fig. 5:5), Ashqelon, Afridar Area F Stratum I (Khalaily 2004: Fig. 8:1, 2), Area J Strata 6–5 (Baumgarten 2004: Figs. 9:10, 11; 10:7; 16:3), Area G (Braun and Gophna 2004: Fig. 19:9–13), Area M Strata II–I (Golani 2008: Figs. 9:10; 10:1–3), Niẓẓanim Layer 4 (Yekutieli and

Gophna 1994: Fig. 11:5) and Taur Ikhbeineh Phases V–III (Oren and Yekutieli 1992: Figs. 11:3; 12:14). This type is not known from EB IB contexts. In the present excavation, this type was found only in Stratum II.

Type SJIII: Large Pithoi with High Vertical Neck and Thumb Indentations on the Rim (Figs. 31:5; 33:11).— This form is associated only with EB IA and may be found at Ashqelon, Afridar Area E (Golani 2004: Fig. 27:3, 5), Area F Stratum II (Khalaily 2004: Fig. 15:1), Area J Stratum VI (Baumgarten 2004: Fig. 15:5), Area G (Braun and Gophna 2004: Fig. 19:4) and Area M Stratum II (Golani 2008: Fig. 10:6) and at Site H–Upper Level in Wadi Ghazzeh (Macdonald 1932: Pl. 40:67). In the present excavation, this form was found in Strata III–II.

Type SJVII: Small to Medium-Sized Store Jars with Sloping Shoulders and Slightly Out-Turned Rim (Figs. 31:6, 7; 33:12).— This general form is found in contexts spanning most of EB IA, such as at Azor Strata II–I (Golani and Brink 1999: Figs. 5:8, 17; 10:9–13), Ashqelon, Afridar Area J Stratum 4 (Baumgarten 2004: Fig. 11:7), Area M Stratum II (Golani 2008: Fig. 10:7), Area F Stratum I (Khalaily 2004: Fig. 9:5, 7, 13, 15–17), Taur Ikhbeineh Phases V–II (Oren and Yekutieli 1992: Figs. 9:8; 11:6, 11; 12:8; 13:11) and Niẓẓanim Strata 5–4 (Yekutieli and Gophna 1994: Figs. 11:2, 3; 12:1, 3). In the present excavation, this form is pervasive in Strata III–II.

Ledge Handles

Type LHI: Plain, Undecorated Ledge Handles (Figs. 31:9; 34:1).— This form is reminiscent of the flattened, horizontal knobs usually associated with gray-burnished bowls of EB IA (Wright 1958:41–42, Fig. 1). The ledge handle is found in southwestern Canaan from the end of EB IA well into EB IB, for example, at Ashqelon, Afridar Area E (Golani 2004: Fig. 29:8), Taur Ikhbeineh Phases III–II (Oren and Yekutieli 1992: Fig. 9:10), Wadi Ghazzeh Site H (Roshwalb 1981: Fig. H.7.:11) and Tel Ḥalif Terrace Stratum II (Alon and Yekutieli 1995: Fig. 21:4).

Type LHII: Ledge Handles with Thumb Indentations (Figs. 31:10; 34:2–5).— Thumb-indented ledge handles are common throughout EB I, as, for example, at Ashqelon, Afridar Area G (Braun and Gophna 2004: Fig. 22:5–12), Area F (Khalaily 2004: Fig. 17:1–4), Niẓẓanim Strata IV–III (Yekutieli and Gophna 1994: Figs. 9:2, 3; 11:7, 8), Taur Ikhbeineh Phases IV–II (Oren and Yekutieli 1992: Figs. 9:2, 9; 10:12), Tel Ḥalif Terrace Strata III–II (Alon and Yekutieli 1995: Figs. 15:6; 18:10, 11; 22:1; 23:6, 9) and Tel ʻErani Layer C (Kempinski and Gilead 1991: Fig. 11:4).

Varia (Fig. 34:9, 10).— Two ceramic objects were found in the debris of pits associated with Stratum II. These include a reworked ceramic disc (Fig. 34:9) that may have served as a lid and a short cylindrical object (Fig. 34:10) that may have served as a pestle or scraper.

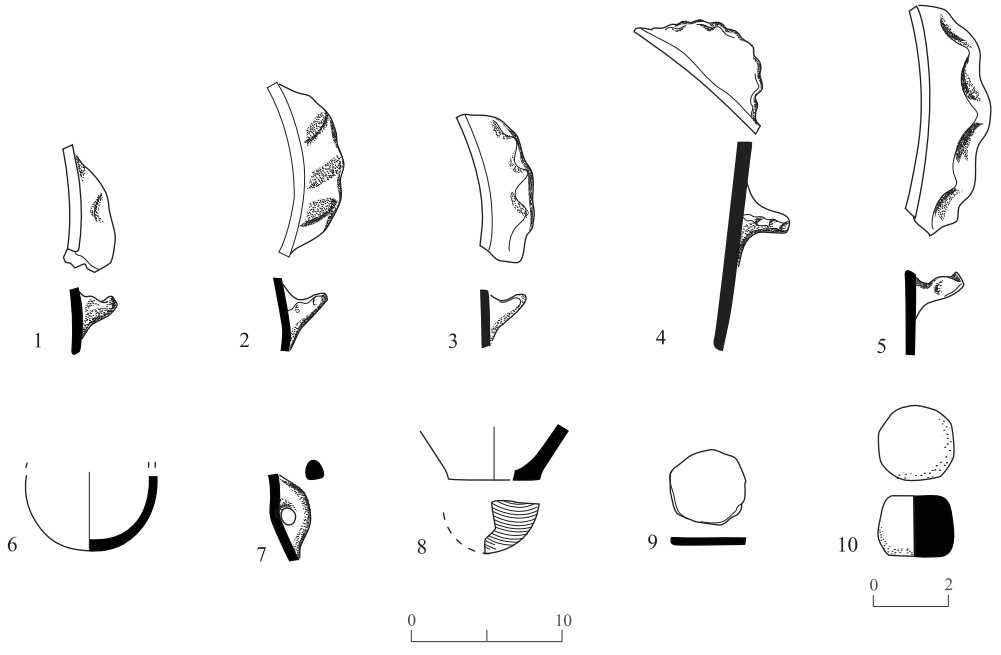

Fig. 34. Stratum II: ledge handles, juglets and varia.

No.	Type	Locus	Basket	Description
1	LHI Ledge handle	577	5147	Brown-gray clay, brown-gray core, small to medium-sized white grits, thumb indentations, medium fired
2	LHII Ledge handle	595	5195	Light brown clay, brown-gray core, small to medium-sized white grits, thumb indentations, poorly fired
3	LHII Ledge handle	569	5128	Light brown clay, light brown-gray core, small to medium-sized white grits, thumb indentations, well-fired
4	LHII Ledge handle	577	5137	Light brown-red clay, light brown core, small to medium-sized white and gray grits, thumb indentations, poorly fired
5	LHII Ledge handle	577	5137	Light brown clay, light brown-gray core, small to medium-sized white grits, thumb indentations, well-fired
6	Juglet	577	5147	Light brown clay, light brown core, small white grits, poorly fired
7	Handle	577	5147	Light brown clay, light brown core, small to medium-sized white grits, medium fired
8	Base	554	5097	Light brown clay, light gray-brown core, small white grits, string-cut base, medium fired
9	Ceramic disc	577	5147	Light brown clay, light brown core, small white grits, poorly fired
10	Ceramic token	569	5149	Light brown clay, light brown core, small white grits, poorly fired

Summary

The ceramic assemblage of both Strata III and II, though limited, may be conclusively associated with EB IA. All the forms present in both strata find parallels at EB IA sites, while forms generally indicative of a late date in the EB I, such as holemouth jars with pronounced interior thickening of the rim and hemispherical bowls, are notably absent in both assemblages. The association of the present corpus with EB IA is further strengthened by the numerous parallels from the Chalcolithic period. Early Bronze Age IA, especially in the Ashqelon region, is characterized by numerous Chalcolithic holdovers in the ceramic repertoire, as well as by other aspects of the material culture (see Golani and Nagar 2011; Golani 2013; forthcoming [b]).

Groundstone Objects

A small assemblage of groundstone artifacts was recovered from the excavation (Fig. 35:1–7). These included a few rims of basalt bowls (Fig. 35:1, 2) typical of the Chalcolithic period and EB IA, as well as a variety of groundstone implements used for grinding and crushing (Fig. 35:3–7). The latter consist of large fragments of grinding slabs (Fig. 35:3, 4) made of limestone and *kurkar*, as well as flint nodules that were roughly worked and appear to have been used as pestles or rubbers (Fig. 35:5, 6). Another groundstone item, made of limestone (Fig. 35:7), bears a double-cone perforation and may have been used as a drill socket (cf. Ilan 2016). A fragment of a limestone disc perforated through its center may have been used as a spindle whorl (Fig. 35:8).

Fig. 35 ▸

No.	Type	Locus	Basket	Description
1	Bowl	545	5085	Non-vesicular basalt, polished on int. and ext.
2	Bowl	586	5157	Non-vesicular basalt, polished on int. and ext.
3	Grinding quern	589	5163	Limestone
4	Grinding quern	545	5090	*Kurkar* stone
5	Pestle	553	5103	Flint nodule, worn smooth on all sides
6	Hammerstone	572	5132	Flint nodule
7	Perforated stone	610	5201	Limestone with double-cone perforation
8	Disc	556	5706	Limestone, well-worked on all sides
9	Metal awl	564	5123	Round cross section, broken at one end
10	Metal needle(?)	550	5096	Flattened needle

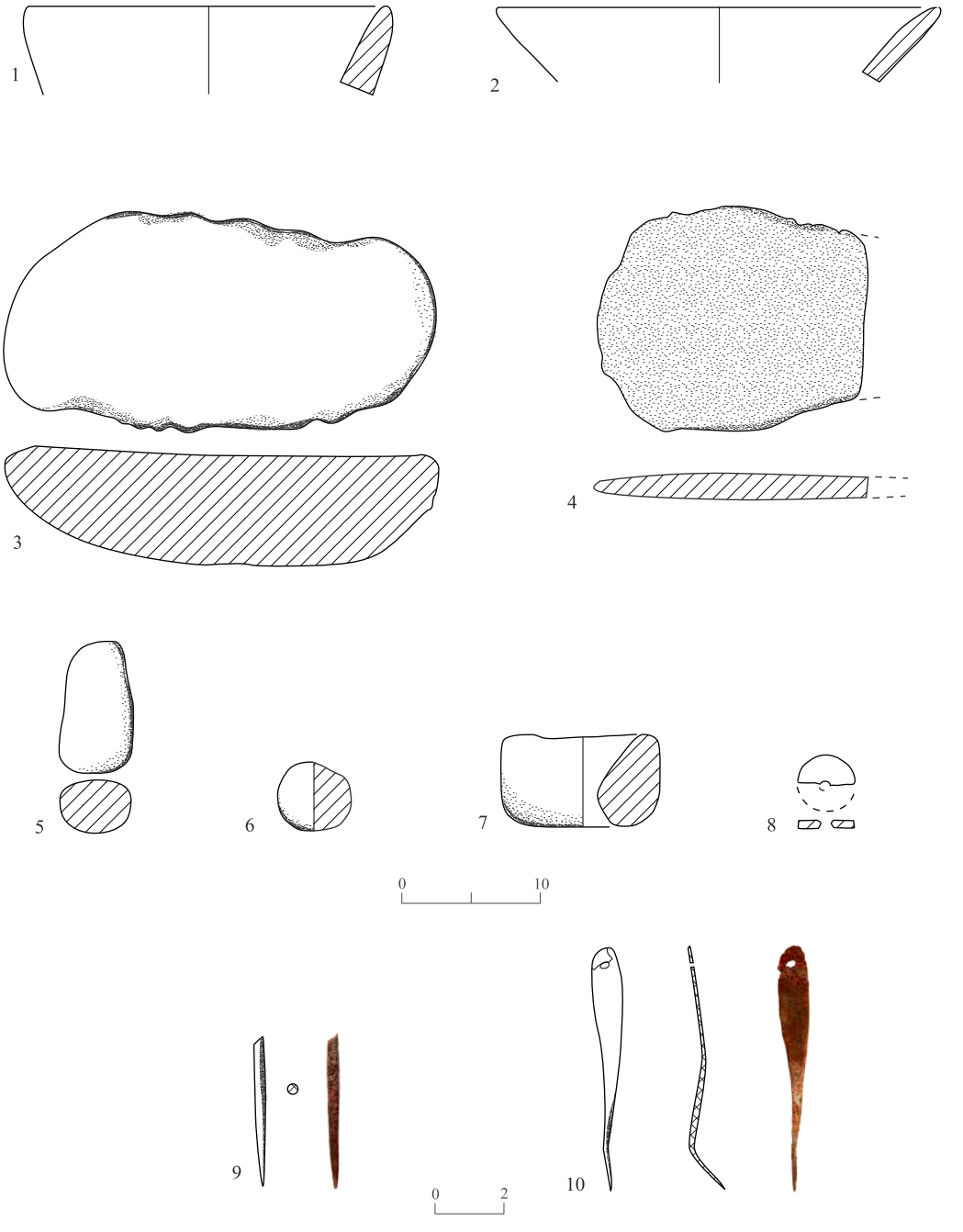

Fig. 35. Groundstone (1–8) and metal (9, 10) objects.

Metal Objects

Two metal objects were found: an awl of rounded cross-section (Fig. 35:9) and a second item (Fig. 35:10) that resembles a flat needle. The latter appears to have been made by flattening an awl; one of its ends was left pointed and unaltered while the rest of the awl was hammered flat, creating an elongated teardrop shape. The wide flattened end was then perforated to form the "eye".

Radiocarbon Dating

Three samples were submitted for radiocarbon dating to the D-REAMS Radiocarbon Dating Laboratory at the Weizmann Institute of Science (Table 1).[5] The samples originated in L577, debris from the lower portion of a large pit associated with Stratum II; L601, the infant jar burial associated with Stratum II; and L603, debris within the lower portion of a pit associated with Stratum III. The sample from L577, taken from a piece of charcoal, produced a date firmly within the mid-fourth millennium BCE and is consistent with the dating of Stratum II to EB IA. The sample from the infant jar burial (L601) and that from the Stratum III pit (L603) are both short-lived olive pits and have produced dates in the first half of the fourth millennium BCE. This is consistent with the dates from earlier excavations at Ashqelon, Afridar Area E, firmly anchoring the dating of EB IA at Ashqelon to the first half of the fourth millennium BCE.

Table 1. Radiocarbon Samples and Dates

Lab No.	Provenance	Type	^{14}C Age ± 1σ Years BP	Calibrated Range ± 1σ	Calibrated Range ± 2σ
RTD-7458.1 RTD-7458.2			4628 ± 38 4676 ± 29		
RTD 7458 Average	L577, B5137	Charcoal	4658 ± 24	3500 (15.4%) 3485 BCE 3475 (44.5%) 3430 BCE 3380 (8.3%) 3370 BCE	3515 (83.2%) 3395 BCE 3385 (12.2%) 3365 BCE
RTD-7459.1 RTD-7459.2			4970 ± 30 5000 ± 30		
RTD 7459 Average	L601, B5183	Olive pit	4985 ± 22	3780 (68.2%) 3715 BCE	3895 (2.6%) 3880 BCE 3800 (92.8%) 3700 BCE
RTD-7460	L603, B5193	Olive pit	5023 ± 30	3935 (40.3%) 3870 BCE 3810 (27.9%) 3765 BCE	3945 (46.6%) 3855 BCE 3845 (2.9%) 3830 BCE 3825 (45.9%) 3710 BCE

[5] The radiocarbon samples were processed by Elisabetta Boaretto of the Weizmann Institute of Science, Reḥovot.

CONCLUSIONS

Along with the previous work in Area E-2 (Golani 2004), the present excavations are an important contribution to the understanding of the early stages of the EB I (EB IA) occupation at Ashqelon, Afridar—a phase that has been termed the "lost horizon" or "missing link" between the Chalcolithic period and EB I in southern Canaan (Braun 2000; 2011). At Ashqelon, Afridar this EB IA occupation has been identified primarily in Areas E, F, G, J, L, M, N, O and P (see Fig. 1) and also at Ashqelon Barneʿa (see Golani 2019: Figs. 1.1, 1.2). The EB IA horizon at Ashqelon, Afridar Area E, which is characterized by numerous cultural elements known from the Chalcolithic period alongside those of early EB I, has also yielded numerous radiocarbon dates that have pushed back the beginning of EB I to well within the first half of the fourth millennium BCE. The first radiocarbon dates published from Areas E-1 and E-2 (Golani and Segal 2002; Golani 2004) have been criticized (Braun and Gophna 2004:220–221), as they did not originate from clearly stratified deposits, but rather from post-depositional buildup within pits that were clearly earlier than their contents. In the present extension of the excavations in Area E-2, the area immediately adjacent to the pits was investigated and two stratified EB I occupation phases were identified that produced additional radiocarbon samples. Their dates significantly enlarge the corpus of ^{14}C dates of clearly stratified material culture that may be associated with EB IA at Ashqelon, while further supporting the early EB I date suggested for previously excavated material from the pits in Area E.

The suggested enclosure wall of Stratum II revealed in this excavation also ties in well with our knowledge concerning spatial organization of the EB I occupation at Ashqelon, Barneʿa, where a system of large domestic and industrial enclosures separated by alleyways and expansive open spaces was revealed (Golani 2019). The results of the present excavation appear to indicate a clear demarcation of activity areas: storage pits and metallurgical processing were located in the western part of the area and a large domestic enclosure, in the east.

The infant burial discovered in the present excavation conforms well with what is already known about infant burials at Ashqelon during EB I. A significant characteristic of these burials is their placement in open spaces within the dwelling areas, mostly next to walls and with the deceased always in a flexed position and oriented to the north. The practice of intra-site infant burials is a direct continuation of a Chalcolithic mortuary tradition that is well-attested throughout EB I at Ashqelon (see Golani and Nagar 2011). The adult human humerus found on the surface immediately above this burial suggests that, while primary burial was practiced at the site, bones were relocated during secondary burial outside the site. This practice was also identified at the Chalcolithic site of Naḥal Qomem[6] and is further indication for continuity of Chalcolithic mortuary practices at Early Bronze Age Ashqelon.

[6] The bones were studied by Yossi Nagar; for the anthropological report, see IAA archives, Naḥal Komem 4432 (2005).

The finds from the present excavation conform with those previously published from Area E-2 (Golani 2004), which consisted primarily of pits filled with debris containing numerous remains of metallurgical processing. No clear elements of metallurgical activity were identified in the present excavation, yet the ceramic, flint (see Yaroshevich, this volume), groundstone, malacological (see Ktalav, this volume) and faunal[7] remains all indicate an EB I material culture that includes also numerous cultural traits of the Chalcolithic period. These traits are now generally accepted as reflecting holdovers characteristic of EB IA in southwestern Canaan (Golani, forthcoming [b]).

Appendix 1. Locus List

Locus	Square	Locus above	Locus below	Description	Stratum
501	F10		514, 529	Topsoil	
502	G10		510, 513, 524	Topsoil	
503	G11		536	Topsoil	
504	H10		515, 525	Topsoil	
505	H11		530, 537	Topsoil	
506	I10		511	Topsoil	
507	I11		512	Topsoil	
508	J10		538	Topsoil	
509	J11		517, 518, 526	Topsoil	
510	G10	502	524	Mixed debris and late intrusions	
511	I10	506	516, 519	Mixed debris above walls	
512	I11	507	520	Mixed debris above walls	
513	G10	502	532, 523	Mixed debris above walls	
514	F10	501	529, 553	Mixed debris and late intrusions	
515	H10	504		Probe down to sterile sands	II?
516	I10	511	528	Combined with L511	
517	J11	509		Sand fill in intrusive pit	I
518	J11	509		Probe down to sterile sands	
519	I10	511	533	Combined with L516	
520	I11	512		Probe in southern portion of square	II?
521				Unused locus number	
522	C11		567	Topsoil	
523	G10	513	545	Debris between W802 and W803, above surface	II?
524	G10	502	545	Debris between walls, above surface	II?
525	H10	504	554, 556, 563, 596	Mixed debris	
526	J11	509		Debris upon surface	II
527	L11			Modern intrusion	

[7] A preliminary analysis of the faunal assemblage will be provided upon request.

APPENDIX 1. (cont.)

Locus	Square	Locus above	Locus below	Description	Stratum
528	I10	516	549	Debris upon surface	II
529	F10	501, 514	593	Combined with L593	II
530	H11	505	559	Combined with L537	
531	I11	512	551	Mixed debris and late intrusions above walls	
532	G10	513	544	Debris next to W802, above surface	II?
533	I10	519		Debris upon surface	II
534	F11		555	Topsoil	
535	G9		546	Topsoil	
536	G11	503	541, 586	Mixed debris and modern intrusions	
537	H11	505	559, 597	Mixed debris above walls	
538	J10	508	574	Mixed debris	
539	K10			Modern intrusion	
540	K11			Modern intrusion	
541	G11	536		Debris and scattered architectural remains	II?
542	E10		558	Removal of topsoil and late intrusions	I
543	E11		591	Topsoil	
544	G10	532		Debris upon surface next to W802	II
545	G10	524	575	Debris upon surface between W802 and W803	II
546	G9	535	550	Debris	II?
547	D10		552	Topsoil	
548	D11		557	Cleanup after tractor excavation	
549	I10	528		Probe down to sterile sands	II
550	G9	546		Burned mud-brick debris on surface next to stone pile	II
551	I11	531		Debris upon surface	II
552	D10	547	587	Debris	II?
553	F10	514	593	Debris upon surface	II
554	H10	525	560	Debris upon surface north of W807	II
555	F11	534	565, 584	Debris above walls	III–II
556	H10	525		Debris upon surface south of W807	II
557	D11	548	580	Debris	II?
558	E10	542	582	Combined with L582	II
559	H11	530, 537	595	Combined with L595	II
560	H10	554		Surface makeup	II
561	E9		569, 570, 572, 573, 578	Debris upon basal sands	II?
562	F9		579	Combined with L564	II
563	H10	525		Combined with L515	II?
564	F9		568, 583	Debris above surface	II?

Appendix 1. (cont.)

Locus	Square	Locus above	Locus below	Description	Stratum
565	F11	555		Debris upon surface	III
566	D9		577	Debris in upper portion of large pit	II
567	C11	522	581	Cleanup and leveling after tractor	
568	F9	564		Combined with L583	II
569	E9	561		Debris in pit	II
570	E9	561		Debris in pit	II
571	D9			Debris upon basal sands	II
572	E9	561		Debris in pit	II
573	E9	561		Debris in pit	II
574	J10	538		Debris upon surface north of W804	II
575	G10	545		Mud-brick installation embedded in surface	II
576	C10		590	Mixed debris	
577	D9	566		Debris in lower portion of large pit	II
578	E9	561		Combined with L561	II
579	F9	562		Combined with L583	II
580	D11	557	589	Combined with L589	III?
581	C11	567	588	Combined with L589	III?
582	E10	558	618	Debris upon surface	II
583	F9	564	568, 579	Debris upon surface	II
584	F11	555		Debris upon surface	III
585	C11	581		Probe in southeast corner of square down to sterile sands	III?
586	G11	536	598	Debris above walls	III–II
587	D10	552		Debris	II?
588	C11	581	594	Combined with L594	III?
589	D11	580		Debris between stones	III
590	C10/11			Combined with L576	
591	E11	543		Combined with L543	
592	F10/11		593	Combined with L514	
593	F10	529, 592, 553	599, 610, 613	Surface makeup	III–II
594	C11	588		Debris upon surface?	III?
595	H11	559		Debris upon surface south of W807	II
596	H10	525	600	Combined with L556	II
597	H11	537		Debris upon surface north of W807	II
598	G11	586	616, 617	Combined with L586	III–II
599	F10	593	615	Debris upon surface	III
600	H10	596	601	Surface makeup	II
601	H10	596, 600		Infant jar burial	II
602	C/D9			Lower half of a ceramic vessel sunken into basal sands	II?
603	F10	599		Debris in pit	III

Appendix 1. (cont.)

Locus	Square	Locus above	Locus below	Description	Stratum
604	F10	593	615	Combined with L615	III
605	H/G10		609	Combined with L525	
606	D9/10			Combined with L587	II?
607	F10	593	615	Combined with L615	III
608	G9/10			Combined with L550	II
609	G/H10	605		Combined with L556	II
610	F10	593	615	Combined with L599	III
611	G10/11			Combined with L524	II?
612	H10	525		Combined with L554	II
613	F10	593	614, 615	Combined with L599	III
614	F10	613		Debris in pit	II
615	F10	599		Beaten-earth surface northwest of Pit L603	III
616	G10	598		Debris upon surface	III
617	G10	598		Debris upon surface	III
618	E10	582	619, 620	Surface makeup	II
619	E10	618		Debris upon surface west of W816	III
620	E10	618		Debris east of W816 and below its base in a pit(?)	III?

References

Ackermann O., Osband M., Bar-Matthews M. and Ayalon A. 2019. The Geographical Setting, Geoarchaeology and Sedimentology. In A. Golani. *Ashqelon Barneʿa; The Early Bronze Age Site* I: *The Excavations* (IAA Reports 65). Jerusalem. Pp. 17–35.

Alon D. and Yekutieli Y. 1995. The Tel Ḥalif Terrace ‘Silo Site’ and Its Implications for the Early Bronze Age I. *ʿAtiqot* 27:149–189.

Baumgarten Y.Y. 2004. An Excavation at Ashqelon, Afridar—Area J. *ʿAtiqot* 45:161–184.

Baumgarten Y. 2006. Ashqelon. *HA–ESI* 118 (July 6). http://www.hadashot-esi.org.il/report_detail_eng.aspx?id=374&mag_id=111 (accessed April 25, 2018).

Brandl B. and Gophna R. 1994. Ashqelon, Afridar. *ESI* 12:89.

Braun E. 2000. Area G at Afridar, Palmaḥim Quarry 3 and the Earliest Pottery of Early Bronze Age I: Part of the ‘Missing Link’. In G. Philip and D. Baird eds. *Ceramics and Change in the Early Bronze Age of the Southern Levant* (Levantine Archaeology 2). Sheffield. Pp. 113–128.

Braun E. 2011. The Transition from Chalcolithic to Early Bronze I in the Southern Levant: A 'Lost Horizon' Slowly Revealed. In J.L. Lovell and Y.M. Rowan eds. *Culture, Chronology and the Chalcolithic: Theory and Transition* (*Levant* Suppl. S. 9). Oxford–Oakville. Pp. 160–177.

Braun E. and Gophna R. 2004. Excavations at Ashqelon, Afridar—Area G. *'Atiqot* 45:185–241.

Commenge-Pellerin C. 1987. *La poterie d'Abou Matar et de l'Ouadi Zoumeili (Beershéva) au IVe millénaire avant l'ère chrétienne* (Les Cahiers du CRFJ 3). Paris.

Dessel J.P. 2009. *Lahav* I: *Pottery and Politics; The Halif Terrace Site 101 and Egypt in the Fourth Millennium B.C.E.* (Reports of the Lahav Research Project Excavations at Tell Halif, Israel I). Winona Lake.

Faust A. and Ashkenazy Y. 2009. Settlement Fluctuations and Environmental Changes in Israel's Coastal Plain during the Early Bronze Age. *Levant* 41:19–39.

Garfinkel Y. 2008. Layer III: Late Chalcolithic Remains. In Y. Garfinkel and D. Dag. *Neolithic Ashkelon* (Qedem 47). Jerusalem. Pp. 310–314.

Golani A. 2004. Salvage Excavations at the Early Bronze Age Site of Ashqelon, Afridar—Area E. *'Atiqot* 45:9–62.

Golani A. 2008. The Early Bronze Age Site of Ashqelon, Afridar—Area M. *'Atiqot* 60:19–51.

Golani A. 2013. The Transition from the Late Chalcolithic to the Early Bronze I in Southwestern Canaan—Ashqelon as a Case for Continuity. In E. Braun and V. Roux eds. *The Transition Late Chalcolithic to Early Bronze Age in the Southern Levant* (*Paléorient* 39/1). Paris. Pp. 95–110.

Golani A. 2014a. Ashqelon, Afridar Area N. *HA–ESI* 126 (December 31). http://www.hadashot-esi.org.il/report_detail_eng.aspx?id=13680&mag_id=121 (accessed April 25, 2018).

Golani A. 2014b. Ashqelon during the EB I Period—A Centre for Copper Processing and Trade. In A. Mączyńska ed. *The Nile Delta as a Centre of Cultural Interactions between Upper Egypt and the Southern Levant in the 4th Millennium BC (Proceedings of the Conference Held in the Poznań Archaeological Museum, Poznań, Poland 21–22 June 2012)* (Studies in African Archaeology 13). Poznan. Pp. 119–137.

Golani A. 2017. Ashqelon. *HA–ESI* 129 (December 16). http://www.hadashot-esi.org.il/report_detail_eng.aspx?id=25352&mag_id=125 (accessed October 4, 2018).

Golani A. 2018. Ashqelon. *HA–ESI* 130 (May 28). http://www.hadashot-esi.org.il/report_detail_eng.aspx?id=25425&mag_id=126 (accessed October 4, 2018).

Golani A. 2019. *Ashqelon Barne'a; The Early Bronze Age Site* I: *The Excavations* (IAA Reports 65). Jerusalem.

Golani A. Forthcoming (a). *Ashqelon Barne'a: The Early Bronze Age Site* II: *The Finds* (IAA Reports). Jerusalem.

Golani A. Forthcoming (b). The Late Chalcolithic/Early Bronze I Transition in Southwestern Canaan and the Ashqelon Occupational Sequence. In M.J. Adams, V. Roux and F. Höflmayer eds. *Transitions during the Early Bronze Age in the Levant: Methodological Problems and Interpretive Perspectives. Proceedings of a Conference Held at the Albright Institute of Archaeological Research, Jerusalem 16–18 May 2018*. Vienna.

Golani A. Forthcoming (c). Rescue Excavations at the Early Bronze Age Site of Ashqelon Afridar, Area N. *'Atiqot*.

Golani A. and Brink E.C.M. van den. 1999. Salvage Excavations at the Early Bronze Age IA Settlement of Azor. *'Atiqot* 38:1–49.

Golani A. and Milevski I. 1999. Ashqelon, Afridar (A). *ESI* 19:82*–83*.

Golani A. and Nagar Y. 2011. Newly Discovered Burials of the Chalcolithic and the Early Bronze Age I in Southern Canaan—Evidence of Cultural Continuity? In J.L. Lovell and Y.M. Rowan eds. *Culture, Chronology and the Chalcolithic: Theory and Transition* (*Levant* Suppl. S. 9). Oxford–Oakville. Pp. 84–96.

Golani A. and Paran N.-S. 2014. Ashqelon, Afridar Area E2. *HA–ESI* 126 (December 21). http://www.hadashot-esi.org.il/Report_Detail_Eng.aspx?id=13679&mag_id=121 (accessed April 25, 2018).

Golani A. and Pasternak M.D. 2020. Ashqelon Afridar, Area O-2: Early Bronze Age IA Remains. *HA–ESI* 132. http://www.hadashot-esi.org.il/images//Ashqelon-8388-hangasha.pdf (accessed April 18, 2021).

Golani A. and Segal D. 2002. Redefining the Onset of the Early Bronze Age in Southern Canaan: New Evidence of ^{14}C Dating from Ashqelon Afridar. In E.C.M. van den Brink and E. Yannai eds. *In Quest of Ancient Settlements and Landscapes: Archaeological Studies in Honour of Ram Gophna*. Tel Aviv. Pp. 135–154.

Gophna R. 1997. The Southern Coastal Troughs as EB I Subsistence Areas. *IEJ* 47:155–161.

Gophna R. 2002. Afridar 1968: Soundings in an EB I Occupation of the "Erani C" Horizon. In E.D. Oren and S. Aḥituv eds. *Aharon Kempinski Memorial Volume: Studies in Archaeology and Related Disciplines* (Beer-Sheva XV). Be'er Sheva'. Pp. 129–137.

Gophna R. 2004. Excavations at Ashqelon, Afridar—Introduction. *'Atiqot* 45:1–8.

Gophna R. and Liphschitz N. 1996. The Ashqelon Trough Settlements in the Early Bronze Age I: New Evidence of Maritime Trade. *Tel Aviv* 23:143–153.

Haimi Y. 2009. Ashqelon. *HA–ESI* 121 (June 28). http://www.hadashot-esi.org.il/Report_Detail_Eng.aspx?id=1119&mag_id=115 (accessed April 25, 2018).

Ilan D. 2016. The Ground Stone Components of Drills in the Ancient Near East: Sockets, Flywheels, Cobble Weights, and Drill Bits. *Journal of Lithic Studies* 3:1–17.

Israeli S. 1999. Ashqelon, Afridar (B). *ESI* 19:83*–85*.

Kempinski A. and Gilead I. 1991. New Excavations at Tel Erani: A Preliminary Report of the 1985–1988 Seasons. *Tel Aviv* 18:164–191.

Khalaily H. 2004. An Early Bronze Age Site at Ashqelon, Afridar—Area F. *'Atiqot* 45:121–159.

Ktalav I. This volume. Molluscs from the Early Bronze Age I Site at Ashqelon, Afridar (Area E-2).

Levy T.E. 1987. *Shiqmim* I: *Studies concerning Chalcolithic Societies in the Northern Negev Desert, Israel (1982–1984)* (BAR Int. S. 356). Oxford.

Macdonald E. 1932. *Beth-Pelet* II: *Prehistoric Fara* (BSAE LII). London.

Nagar Y. This volume. Anthropological Remains from Ashqelon, Afridar (Area E-2).

Nir Y. 2008. The Wells of Ashkelon. In L.E. Stager, J.D. Schloen and D.M. Master eds. *Ashkelon* 1: *Introduction and Overview (1985–2006)*. Winona Lake. Pp. 105–106.

Oren E.D. and Yekutieli Y. 1992. Taur Ikhbeineh: Earliest Evidence for Egyptian Interconnections. In E.C.M. van den Brink ed. *The Nile Delta in Transition: 4th–3rd Millennium B.C. (Proceedings of the Seminar Held in Cairo, 21.–24. October 1990, at the Netherlands Institute of Archaeology and Arabic Studies).* Tel Aviv. Pp. 361–384.

Paran N.-S. 2014. Ashqelon, Marina. *HA–ESI* 126 (December 31). http://www.hadashot-esi.org.il/report_detail_eng.aspx?id=13693&mag_id=121 (accessed April 25, 2018).

Rosenberg D. and Golani A. 2012. Groundstone Tools of a Copper-Smith's Community: Understanding Stone-Related Aspects of the Early Bronze Age Site of Ashqelon Barne'a. *JMA* 25/1:27–51.

Roshwalb A.F. 1981. *Protohistory in the Wadi Ghazzeh: A Typological and Technological Study Based on the Macdonald Excavations*. Ph.D. diss. University of London. London.

Sharvit J., Galili E., Rosen B. and Brink E.C.M. van den. 2002. Predynastic Maritime Traffic along the Carmel Coast of Israel: A Submerged Find from North 'Atlit Bay. In E.C.M. van den Brink and E. Yannai eds. *In Quest of Ancient Settlements and Landscapes: Archaeological Studies in Honour of Ram Gophna.* Tel Aviv. Pp. 159–166.

Toueg R. 2010. Ashqelon. *HA–ESI* 122 (May 26). http://www.hadashot-esi.org.il/Report_Detail_Eng.aspx?id=1401&mag_id=117 (accessed June 29, 2020).

Tufnell O. 1958. *Lachish (Tell ed-Duweir)* IV: *The Bronze Age* (The Wellcome Archaeological Research Expedition to the Near East Publications IV) (2 vols.). London–New York–Toronto.

Wallach Z. 2003. Ashqelon (A). *HA–ESI* 115:58*–59*.

Wright G.E. 1958. The Problem of the Transition between the Chalcolithic and Bronze Ages. *Eretz-Israel* 5:37*–45*.

Yaroshevich A. This volume. The Flint Assemblage from Ashqelon, Afridar (Area E-2).

Yekutieli Y. 2000. Early Bronze Age I Pottery in Southwestern Canaan. In G. Philip and D. Baird eds. *Ceramics and Change in the Early Bronze Age of the Southern Levant* (Levantine Archaeology 2). Sheffield. Pp. 129–152.

Yekutieli Y. 2001. The Early Bronze IA of Southwestern Canaan. In S.R. Wolff ed. *Studies in the Archaeology of Israel and Neighboring Lands in Memory of Douglas L. Esse* (SAOC 59/ASOR Books 5). Chicago–Atlanta. Pp. 659–688.

Yekutieli Y. and Gophna R. 1994. Excavations at an Early Bronze Age Site near Niẓẓanim. *Tel Aviv* 21:162–185.