'Atiqot 111, 2023

The Late Bronze Age III (Iron Age IA) Gal'on Fortress in the Shephelah

Saar Ganor and Itamar Weissbein[1]

A previously unknown square building was uncovered at Gal'on in the Judean Shephelah, located between Tel Zayit and Tel Burna. The building was identified as a fortress, similar in plan and dimensions to several other excavated buildings designated "Governors' Residencies", and to a few buildings that were defined as "fortresses"—all associated with Egyptian imperial rule in Canaan in Dynasties XIX and XX. The construction of the isolated building at Gal'on may have been related to the reorganization of Canaan under Egyptian rule, possibly in the reign of Ramses III. The building may have been occupied by an Egyptian military force, or more plausibly by a local Canaanite force associated with the city-state of Lakhish. This article discusses the Ga'lon fortress in light of the other previously unearthed buildings, providing a comprehensive understanding of the geopolitical changes in the region in the twelfth century BCE

Keywords: Lakhish, city-state, fortress, governors' residency, Philistines, Egypt, military

Introduction

Excavations carried out in 2018–2019 at Rujum el-Masha'ala, an archaeological site located south of Kibbutz Gal'on in the west of the Shephelah (map ref. 185905/614992), exposed a large building dating from Late Bronze Age III (Iron Age IA; twelfth century BCE; Fig. 1).[2]

---

[1] Saar Ganor, Israel Antiquities Authority; Itamar Weissbein, The Hebrew University of Jerusalem.

[2] The excavations, on behalf of the Israel Antiquities Authority (Permit Nos. A-8363, A-8412), were conducted by Saar Ganor and Shifra Weiss, as part of a training course for IAA archaeological supervisors, in the context of a Jewish National Fund project of the Judean Kings Trail Project. Assistance was provided by Yasser Alamor (administration), Emil Aladjem (surveying, photogrammetry), Davida Eisenberg-Degen (field photography), Reut Elya (logistics), Yael Abadi-Reiss (scientific guidance), Amir Ganor (course director), Josef Bukengolts (pottery restoration), Argita Gyerman-Levanon (digital documentation), Marina Shuiskaya (pottery plates), Ilanit Azoulay (drafting), Itamar Weissbein (isometric reconstruction, schematic plans, pottery processing), Dafna Gazit (studio photography), Maya Oron (flint and stone processing), Ariel Inbar and Jacques Nagar (conservation), Vladik Lifshits (Lakhish Region archaeologist) and Talila Livshitz (JNF Southern District). The many volunteers participating in the excavation included Federico Kobrin, Gideon Goldberg, Ilan Haddad, Maayan Hemed and Shira Bloch of the Kibbutz Gal'on Nachshon pre-military program, and students of the Land of Israel Studies at the Ramot Be'er Sheva Interdisciplinary High School.

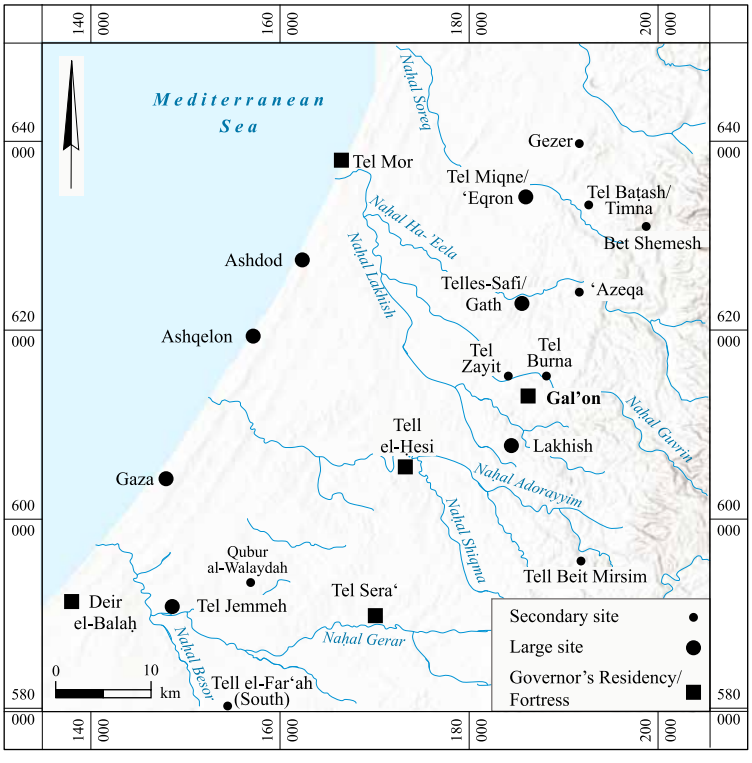

Fig. 1. Map of the southwestern area of Canaan showing the main sites mentioned in the text.

Fig. 2. Aerial view of the Gal’on Fortress, with Naḥal Guvrin on right, looking west.

The previously unknown building, designated the 'Gal'on Fortress', is situated on a low spur on the southern bank of Naḥal Guvrin, overlooking the ancient east–west road that runs alongside the streambed and connects the central mountain ridge with the Judean Shephelah and the coastal plain (Fig. 2; Dorsey 1991:191–193, Map 13). The site lies between two ancient tell sites: Tel Zayit, located c. 2 km to the west (Tappy 2008) and Tel Burna, c. 2 km to the east (Shai, McKinny and Uziel 2015; McKinny, Tavger and Shai 2019; Tavger et al., this volume).

The Building (Fig. 3; Plan 1)

The square building (18.2 × 17.9 m) had thick outer walls (c. 1.9 m wide), built of two rows of large, roughly worked stones with a core of small and medium-sized stones (Ganor and Weissbein 2020; 2022). The four corners of the building were buttressed with very large stones that protruded c. 0.5 m beyond the line of the walls (for a list of loci

Fig. 3. Gal'on Fortress, looking west.

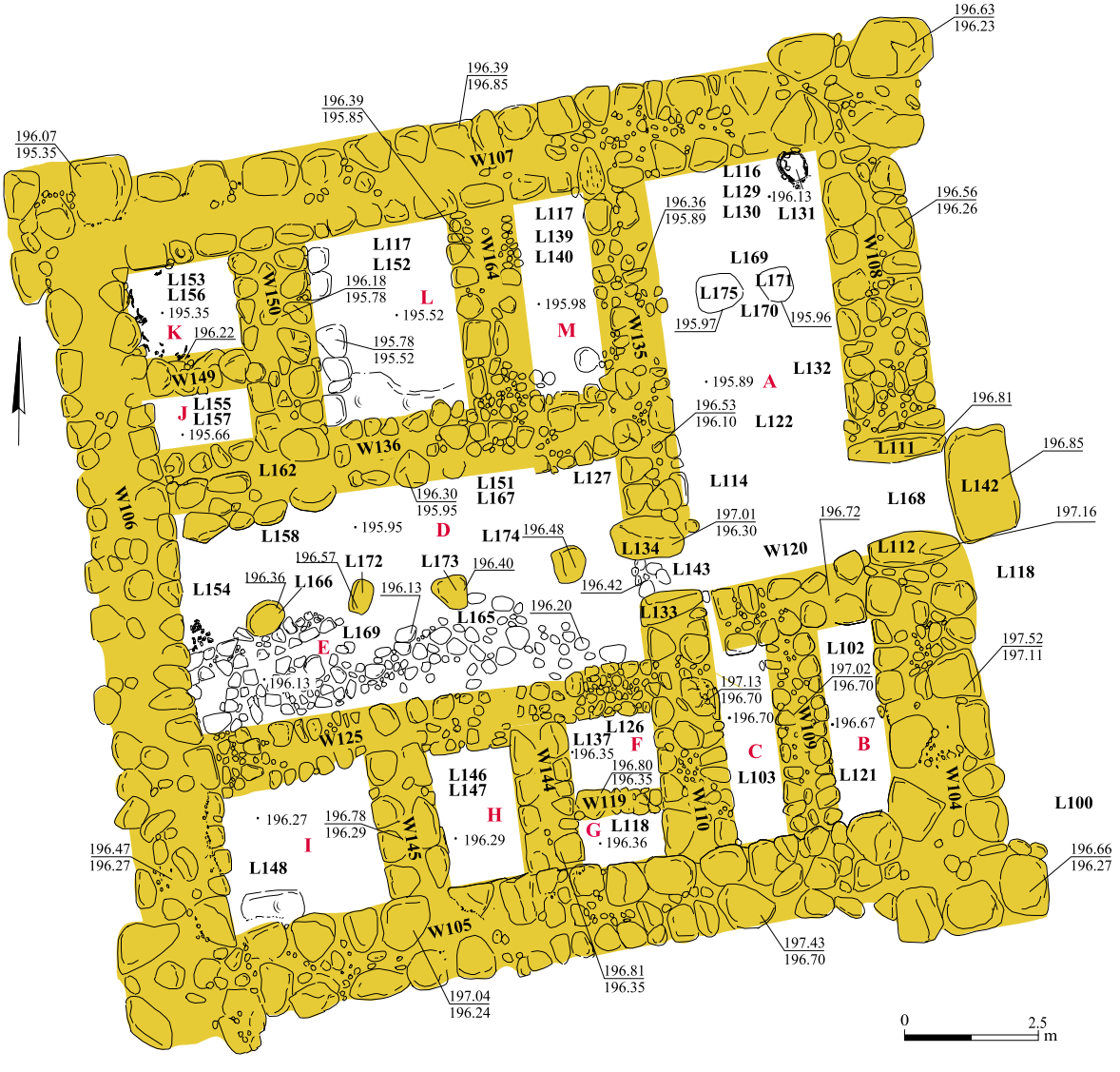

Plan 1. Plan of the Gal'on Fortress.

and walls, see Appendices 1; 2). The walls, preserved up to three stone courses (0.4–0.7 m high), were probably the stone foundations of the building that supported a mud-brick superstructure. The outer walls of the building are W107 in the north, W106 in the west, W105 in the south, and W104 and W108 in the east. The main and only entrance (1.5 m wide) into the building was in the middle of the eastern wall (between W104 and W108); it was flanked by two large stone doorjambs (L111, L112), in front of which lay an extremely large rectangular flat stone slab (L142; 1.2 × 2.2 m).

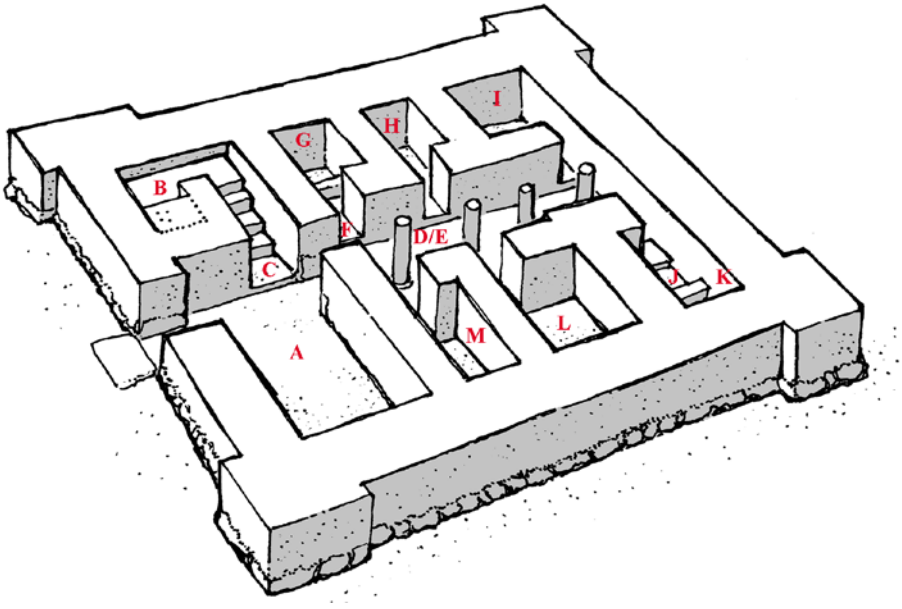

Fig. 4. Isometric reconstruction of the Gal'on Fortress.

The building comprised a front wing and a rear wing (Fig. 4). The front wing was accessed from the main entrance, and included an entrance hall or open courtyard (A) and an adjacent room (B/C) that was probably a staircase tower. The rear wing, accessed from an entrance in the southwestern corner of Room A, comprised a large central hall (D/E), flanked on either side by a row of three small rooms (F–I in the south, J–M in the north). No entrances into the side rooms were extant, probably due to the poor preservation of the walls.

The Front Wing

Room A. The building's main entrance led into Room A (3.5 × 6.5 m), an open courtyard or a roofed hall, with a packed-earth floor, overlain by a layer of debris incorporating some collapsed mud bricks (L122, L129, L130, L132, L168, L170). In the northeastern corner there was a clay oven lined with pottery sherds (L131; diam. 0.6 m; Fig. 5), containing several charred olive pits that were retained for ^{14}C dating. Two flat stones (L171, L175), exposed beneath a pile of collapsed stones (L169), may have served as a working surface associated with the oven (Fig. 6).

Room B/C, Staircase Tower. The southwestern room was divided by W109 into two narrow spaces (B, C; each c. 3.6 × 1.1 m). The extant building remains in this room were probably the foundations of a staircase that led to an upper story or to the roof. Space C was probably the ground floor area leading to the stairs, as its overlying debris layer (L103) contained a significantly larger pottery assemblage compared to Space B, whose fill layer

Fig. 5. Room A, clay oven lined with pottery sherds, looking north.

Fig. 6. Room A, two flat stones that may have served as working surfaces associated with the oven, looking north.

(L102) contained no pottery, and thus the soil excavated in Space B seemed to represent a constructional fill below the upper part the no-longer extant stairs. A circular concentration of ash (L121) uncovered in Space B may have been associated with the staircase, but was more probably the remains of a later bonfire.

The Rear Wing

On the southwestern corner of Room A, a secondary entrance (1.2 m wide) was found, which led to a rear wing of the building. Like the main entrance, it was also flanked by two large stone doorjambs—one upstanding (L133), the other found leaning on its side (L134). The entrance threshold was paved with medium-sized stones.

Room D/E, Central Hall. The inner wing of the building centered around a large rectangular hall (8.9 × 4.5 m) with a row of four stone column bases, indicating that it was once roofed. The southern side of the hall (E) was stone-paved and the northern side (D) had a packed-earth floor. The hall floor was overlain by a debris layer (L127, L138, L151, L154, L158, L159, L165, L167).

Room F/G. The room, located southeast of the central hall, was divided into two by a narrow partition wall (W119) built of a single row of stones, preserved for one course. An entrance probably originally led from the central hall into the front space (F; 1.80 × 1.35 m) that would have been the main activity area in the room. The small back space (G; 1.8 × 0.90 m) had a small-stone floor on bedrock, and seems to have been used for storage, as the overlying debris layer (L118) contained a rich pottery assemblage, including several complete pottery vessels, as well as a few grinding stones and animal bones, found alongside fragments of white plaster, ash and burned mud bricks.

Room H. A small room (2.5 × 1.7 m) with a packed-earth floor was overlain by a debris layer (L147) containing a few plaster fragments and multiple sherds of about two to four pottery scoops/asymmetrical bowls.

Room I. This relatively large room (3.0 × 2.8 m), located southwest of the central hall, had a bedrock floor leveled with a few small stones, overlain by a debris layer (L148) containing only a few potsherds.

Room J/K. The room, located northwest of the central hall, was similar to Room F/G in that it was also divided into two spaces by a partition wall built of a single row of large stones (W149), here preserved for two courses. An entrance probably once led from the hall into the small front space that would have been the main activity area in the room (J; 2.0 × 1.2 m), while the back space (K; 2.0 × 2.0 m) was probably used for storage, as the debris layer (L156) contained a rich pottery assemblage, including several complete pottery vessels, a few animal bones, organic material and plaster fragments (Fig. 7).

Room L. This room was located north of the central hall (3.7 × 3.0 m). The debris layer on the packed-earth floor in this room was hardly extant, and the soil layer that was excavated (L152) was predominantly the fill below the floor. The exposure of the lower courses of the western wall (W150) revealed that they were buttressed with a row of large stones consolidating the wall's foundations.

Room M. This small room (3.8 × 2.3 m) was located north of the central hall. Two stone patches on the southern and northwestern sides of the room (3.8 ×2.3 m) may have been the remains of a stone-paved floor; a thin debris layer (L139, L140) that overlay the floor contained a few sherds.

Fig. 7. Pottery vessels in Room K, looking east.

Thousands of pottery sherds strewn throughout the building included several complete and broken vessels. The only other finds were a few flint and stone objects, plaster pieces, animal bones and a few olive pits.

THE POTTERY ASSEMBLAGE AND DATE

The pottery assemblage retrieved from the fortress comprised 1765 rim sherds and 365 bases, totaling 2130 diagnostic sherds, and 44 complete vessels. The vessels and sherds were classified typologically according to vessel class (e.g., bowl, krater, cooking pot, etc.), divided into types (e.g., BL1, BL2), and sometimes further into subtypes (e.g., BL1a, BL2b).

A quantitative analysis, based on the calculation of the Rim-Circumference Factor (Rm/Cf), was carried out on the assemblage with the aim of assessing the quantities and percentages of the various classes and types of vessels in the rooms (Table 1; see *Quantitative Analysis*, below). The quantitative analysis enabled the presentation of the spatial distribution of the pottery vessels in the different rooms of the building (see *Spatial Distribution*, below).

The pottery assemblage is composed of characteristic local Canaanite vessel types, and several locally manufactured, Egyptian-style vessel types. The Egyptian-style pottery, whose fabric is visually similar to that of the local wares, includes many open shallow

Table 1. The Pottery Assemblage in the Gal'on Fortress

Type	N[i]	%[ii]
Bowls	1515	79.5
Kraters	46	2.2
Cooking pots	20	0.9
Juglets	3	1.3
Stirrup jug	1	0.5
Jugs	14	1.0
Storage jars	75	6.3
Lamps	26	1.4
Cup-and-saucers	6	1.5
Lids	4	1.6
Scoops	27	1.6
Stands	24	1.9
Varia	4	0.2
Total	*1765*	*100.0*

[i] No. of rims.

[ii] Percentage of examples based on rim-circumference (Rm/Cf) calculation.

bowls (Gal'on Types BL1, BL2), some open bowls with slightly rounded sides and simple rims (Gal'on Type BL3), a few rim sherds of Egyptian-style tall-necked jars (Gal'on Type SJ3), and a few lids of a rare type. Only one rim sherd was possibly identified as that of an imported Egyptian amphora (Gal'on Type SJ4). Very few vessels exhibit Aegean influence, including globular juglets (Gal'on Type JT2) and a 'false neck' of a locally manufactured stirrup jar.

The pottery assemblage is characteristic of the Late Bronze Age III (Iron Age IA), closely resembling ceramic assemblages from sites in the region that were destroyed in the second half of the twelfth century BCE. These sites include Tel Lakhish Level VI (Tufnell 1958:176–224; Clamer 2004a; Yannai 2004), Tel 'Azeqa (Azekah) Stratum T2-3 (Kleiman, Gadot and Lipschitz 2016) and Tel Sera' Stratum IX (Oren 1984:41, Figs. 4–7). As in those assemblages, imported Cypriot and Mycenaean pottery were not found at Gal'on. In addition, no ceramic or other types of finds were found that could testify that Gal'on was inhabited before the twelfth century BCE. Hence, it seems that the building functioned for a short period until its abandonment in the second half of the twelfth century BCE (see below).

Pottery Typology (Figs. 8–16)

The vessels were classified according to types, sometimes further divided into subtypes, based on variations in the body and rim profiles. The number of rim sherds counted of each vessel type, the percentage of the type in the total pottery assemblage based on the

calculated quantitative analysis (for which see *Quantitative Analysis*, below), appear in the parentheses next to each type or subtype. Parallels for the vessel types are predominantly cited from published pottery assemblages from contemporary sites in southwestern Canaan.

Bowls

The bowls are by far the most common vessels in the fortress, comprising 79.5% of the total pottery assemblage. They were classified into eight types (BL1–BL8; Table 2). The extant bases were retained and counted (N = 303), showing that most of the bowls had a flat disc (N = 169; 55.8%) or flat (N = 117; 38.6%) base, only a few having a concave disc (N = 10; 3.3%), rounded (N = 5; 1.6%) or ring base (N = 2; 0.7%).

Type BL1: Shallow Bowls with Straight Flaring Sides (N = 114; 5.9%; Figs. 12:1–5; 13:5; 14:1) These very shallow bowls with straight sides usually have a slightly tapered rim, sometimes slightly flaring, but less clearly flared than Type BL2a, the distinction between the two types not always being clear-cut. The bowl height is c. 4 cm and the rim diameter is 15–22 cm, although some bowls were not symmetrical. A complete bowl with a rounded base (Fig. 14:1) may belong to this type, although its rim is less flared than the more typical examples. These Egyptian-style bowls, corresponding to Martin's Type BL2b (Martin 2011:34–35), are common at thirteenth–twelfth-century BCE sites with significant Egyptian influence, while they are rare at Lakhish.
Parallels: Lakhish VI (Clamer 2004a: Figs. 21.5:28; 21.10:20, 21, 25); Tel Seraʿ X–IX (Martin 2011: Pls. 51:11–17; 52:4–6; 54:14; 56:17; 57:1–6, 8–18; 58:1, 2,7, 8; 59:1–4; 62:11, 12); Deir el-Balaḥ VII (Dothan and Brandl 2010: Pl. 42:4, 6); Tel Mor VII (Martin

Table 2. Bowls

Type	N[i]	%[ii]
BL1	114	7.4
BL2	225	15.3
BL3	882	58.9
BL4	176	11.0
BL5	67	3.9
BL6	27	2.0
BL7	3	0.2
BL8	6	0.3
BL varia	14	0.9
Total	1514	100

[i] Including whole/part vessels and rim sherds.
[ii] Percentage based on rim-circumference (Rm/Cf) calculation.

and Barako 2007: Fig. 4.9:1); Gezer XIV (Dever et al. 1974: Pl. 25:23); Afeq X12 (Gadot 2009: Figs. 8.49:17; 8.58:9; 8.61:13–15).

Type BL2: Open Bowls with Flaring Sides and Everted Rims (N = 225; 12.2%)
Shallow open bowls with flaring walls and everted rims. This bowl type is divided into two subtypes by the shallowness of the bowls, although the distinction is not always clear, especially in small rim fragments.

Type BL2a (Figs. 8:1, 2; 9:1; 10:1; 11:1, 2; 12:6–9; 14:2–7).— Shallow bowls with straight flaring walls and everted rims, and flat or very low flat to slightly concave disc bases. These bowls are usually slightly deeper than Bowl Type BL1. The bowl height is c. 4.0–5.5 cm and the rim diameter is 14–25 cm, although some bowls were asymmetrical. Some vessels exhibited imprints of chopped straw on the flat base (Fig. 14:4), and horizontal scraping marks on the lower third of the vessel (e.g., Fig. 14:4, 7). These Egyptian-style bowls generally correspond to Martin's Type BL3b, and perhaps also BL4 (Martin 2011:35–41).

Type BL2b (Figs. 10:2; 11:3, 4; 12:10–12; 14:8–14).— Open bowls with rounded flared walls and everted rims, and a flat or flat disc base. This type is similar to Type BL2a but it has a deeper and more rounded profile. The bowl height is c. 6–8 cm and the rim diameter, 16–26 cm. These bowls are common at Lakhish Level VI, dated to the twelfth century BCE, where the rims are often decorated with a purple 'lipstick' decoration (Yannai 2004:1051–1052; Clamer 2004a:1289); this decoration does not appear on the Gal'on bowls. Yannai (2004), Clamer (2004a) and Martin (2011:24–38) defined these bowls as a local type inspired by Egyptian-style bowls, specifically Martin's Type BL3a (Martin 2011:34–35).
Parallels for Types BL2a and BL2b: Lakhish VI (Aharoni 1975: Pl. 39:2–4, 6; Yannai 2004: Figs. 19.41:1–6; 19.46:1, 15, 18; 19.51:10; 19.52:1, 2, 10, 11; Clamer 2004a: Figs. 21:1:1–17; 21:5:1–9; 21.8:1, 2; 21.10:1–15; Ussishkin 2004a: Fig. 20.33:1–6); Qubur al-Walaydah VIII (Lehmann et al. 2010: Fig. 6:8); Tel Seraʿ IX (Martin 2011: Pl. 60:3); Deir el-Balaḥ VII (Dothan and Brandl 2010: Pl. 42:7, 8); Tel Ẓippor IV (Yannai 2000: Fig. 2:5, 6); Tel Baṭash/Timna VIA (Panitz-Cohen 2006: Pl. 58:12, 24); Afeq X12 (Gadot 2009: Fig. 8.56:2).

Type BL3: Simple Open Bowls (N = 882; 46.8%)
The simple open bowls with flared walls were divided into three subtypes. The bowls commonly have flat bases (65%) that are occasionally very thick, some as low disc bases (35%) that are usually flat and occasionally slightly concave. Scraping marks are sometimes clearly visible on the lower third of the bowls' exterior and on the base. The rim diameter is 15–26 cm, a few bowls being larger or smaller. These bowls bear a resemblance to Egyptian-style bowls, roughly corresponding to Martin's Type BL1a (Martin 2011:30–34).

Type BL3a (Figs. 8:3; 9:2, 3; 10:3; 11:5; 12:13; 14:16–22; 16:1).— Open bowls with rounded flared walls and simple rims, some of which are slightly tapered and others slightly

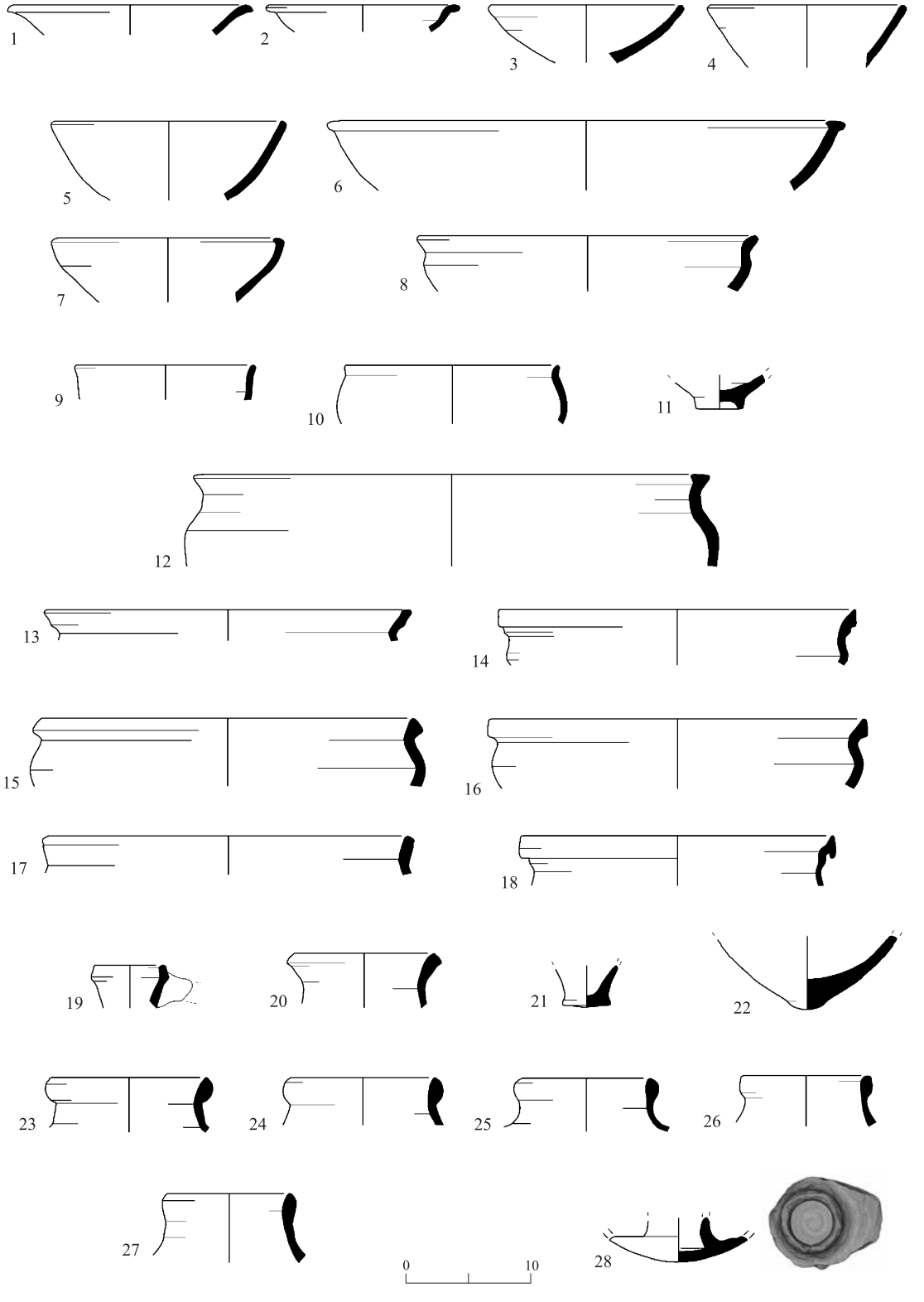

Fig. 8. Pottery from Room A.

◂ **Fig. 8**

No.	Vessel	Type	Locus	Reg. No.
1	Bowl	BL2a	122	1015-03
2	Bowl?/Chalice?	BL2a	169	1108-02
3	Bowl	BL3a	122	1015-04
4	Bowl	BL3c	130	1041
5	Bowl	BL3	130	1041-05
6	Bowl	BL4a	122	1015-02
7	Bowl	BL4a	130	1041-01
8	Bowl	BL6b	130	1041-04
9	Bowl	BL7	132	1031
10	Bowl	BL8	130	1098-01
11	Bowl		132	1032-02
12	Krater	KR1	170	1110-01
13	Cooking pot	CP1	130	1098-02
14	Cooking pot	CP2	169	1108-01
15	Cooking pot	CP2	169	1108
16	Cooking pot	CP2	132	1032
17	Cooking pot		130	1098-03
18	Cooking pot?		130	1041-03
19	Jug		122	1015-06
20	Jug?		170	1110
21	Jug		122	1015-05
22	Jug?		122	1015
23	Storage jar	SJ1	130	1098
24	Storage jar	SJ1	130	1041-06
25	Storage jar	SJ1	132	1031-01
26	Storage jar	SJ1	130	1023
27	Storage jar	SJ2	122	1015-01
28	Cup-and-saucer		130	1098-04

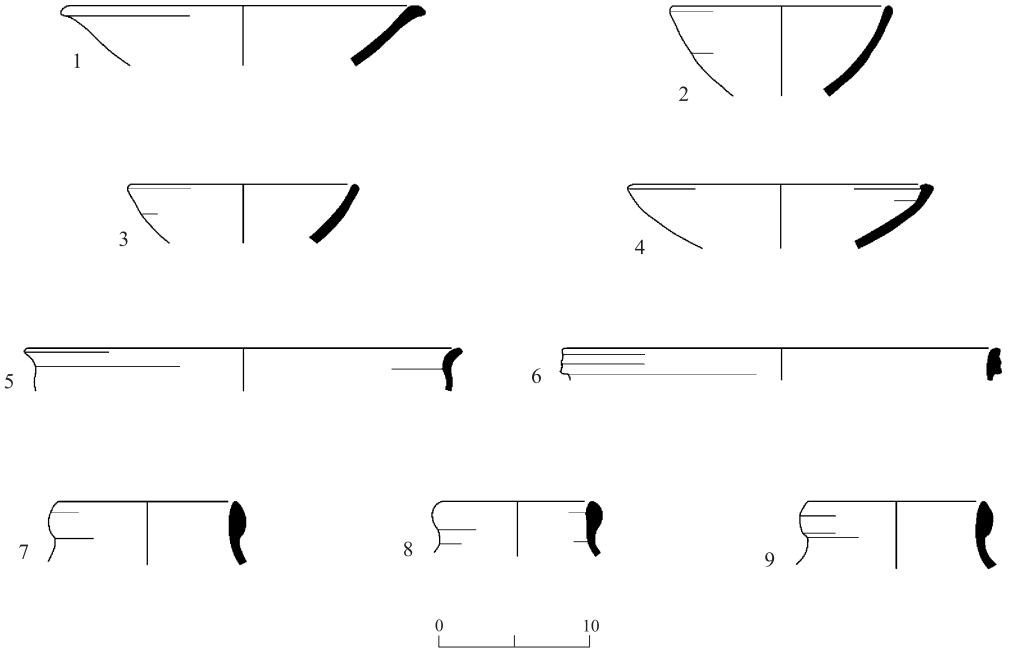

Fig. 9. Pottery from Room C (L103).

No.	Vessel	Type	Reg. No.
1	Bowl	BL2a	1003-03
2	Bowl	BL3a	1003
3	Bowl	BL3a	1003-05
4	Bowl	BL4a	1003-07
5	Bowl	BL6a	1009
6	Cooking pot	CP1	1003-06
7	Storage jar	SJ1	1003-01
8	Storage jar	SJ1	1003-02
9	Storage jar	SJ1	1003-04

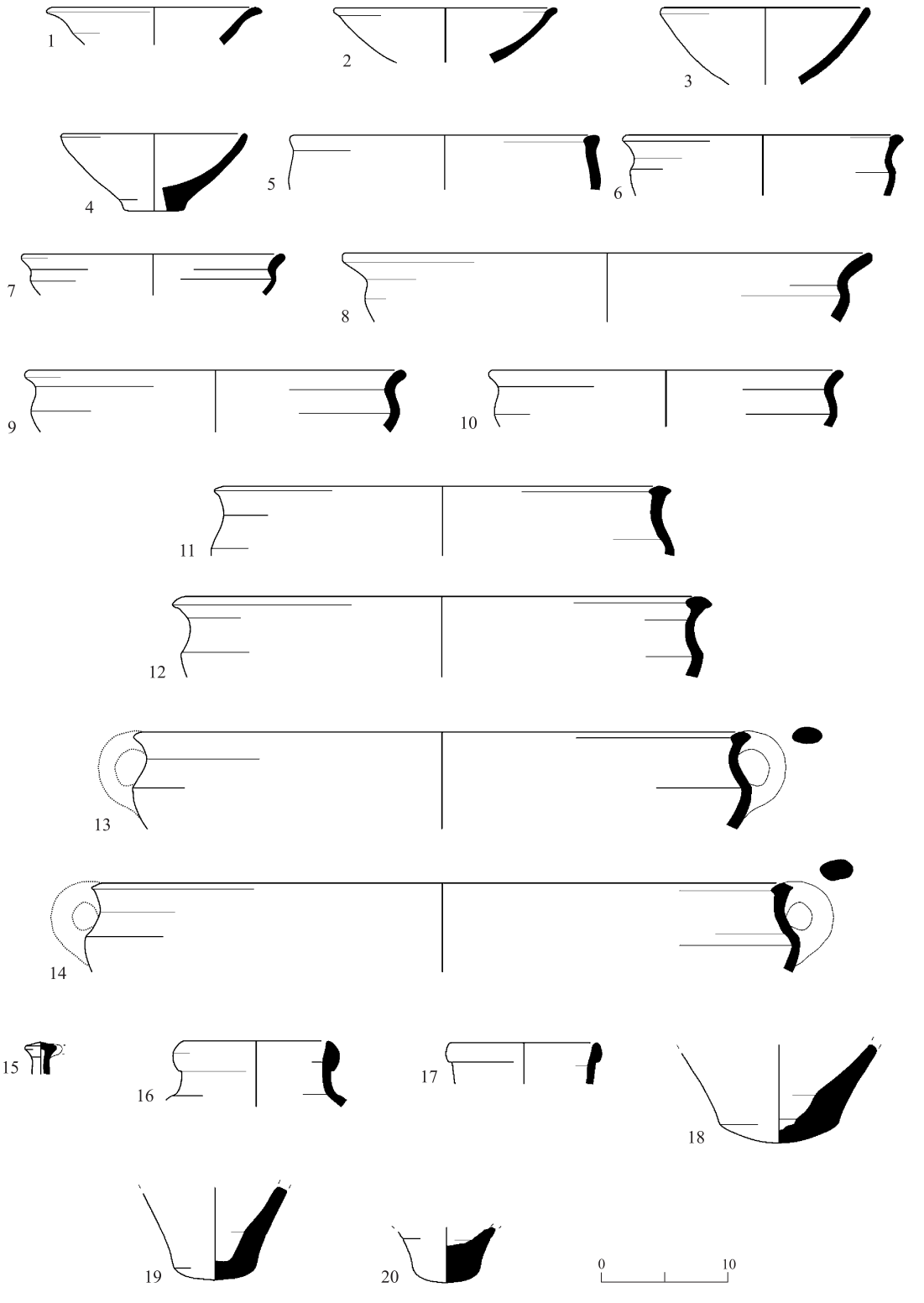

Fig. 10. Pottery from Room D/E.

◂ **Fig. 10**

No.	Vessel	Type	Locus	Reg. No.
1	Bowl	BL2a	151	1093-01
2	Bowl	BL2b	158	1066
3	Bowl	BL3a	151	1093
4	Bowl	BL3	151	1093-02
5	Bowl	BL4b	167	1099
6	Bowl	BL5b	138	1030
7	Bowl	BL6a	167	1099-01
8	Bowl	BL6b	167	1099-03
9	Bowl	BL6b	151	1073
10	Bowl	BL6b	159	1067
11	Krater	BL5b/KR1	167	1099-06
12	Krater	KR1	158	1066-01
13	Krater	KR1	167	1099-04
14	Krater	KR1	167	1099-05
15	Stirrup jar		167	1099-07
16	Storage jar	SJ1	138	1030-01
17	Storage jar	SJ1	158	1066-02
18	Storage jar		154	1067
19	Storage jar		167	1099-02
20	Storage jar?		158	1066-03

thickened. Faded purple 'lipstick' was observed on 11 rim sherds, 2.5% of the rims attributed clearly to Subype BL3a.
Parallels: Lakhish VII–VI (Yannai 2004: Figs. 19.30:4, 5; 19.34:3; 19.38:3; 19.41:7–10, 13, 14; 19.46:3–5; 19.51:11; Clamer 2004a: Figs. 21.5:22–27; 21.11:2); Tel Seraʿ IX: (Martin 2011: Pls. 51:5; 55; 56:3–5; 62:3, 5, 6); Deir el-Balaḥ VII (Dothan and Brandl 2010: Pl. 42:1, 3); Tel Ẓippor IV–V (Yannai 2000: Figs. 2:1–3; 3:1, 3, 5, 6; 4:1–5); Tell es-Safi/Gath E4b (Gadot, Yasur-Landau and Uziel 2012: Pl. 12.7:1); Qubur al-Walaydah VIII (Lehmann et al. 2010: Fig. 6:7); Tel Mor VII: (Barako 2007: Fig. 3.7:12); Gezer XV–XIV (Dever et al. 1970: Pl. 28:19); Afeq X12: (Gadot 2009: Fig. 8.60:11, 12).

Type BL3b (Fig. 12:14, 15; 14:23).— Open bowls with rounded flared walls and beveled rims that either slope outward or are cut at a diagonal angle.
Parallels: Lakhish VII–VI (Yannai 2004: Figs. 19.27:2, 3; 19.36:1; 19.39:7; 19.41:10; 19.46:8, 17, 19; 19.51:12; 19.52:3; Clamer 2004a: Figs. 21.1:31–35; 21.5:31, 32; Ussishkin 2004a: Fig. 20.33:8, 10); Tel Ẓippor V (Yannai 2000: Fig. 3:4); Tel Mor VII (Barako 2007: Fig. 3.7:11); Gezer XV–XIV (Dever et al. 1970: Pl. 28:13); Afeq X12 (Gadot 2009: Figs. 8.59:7; 60:14, 15).

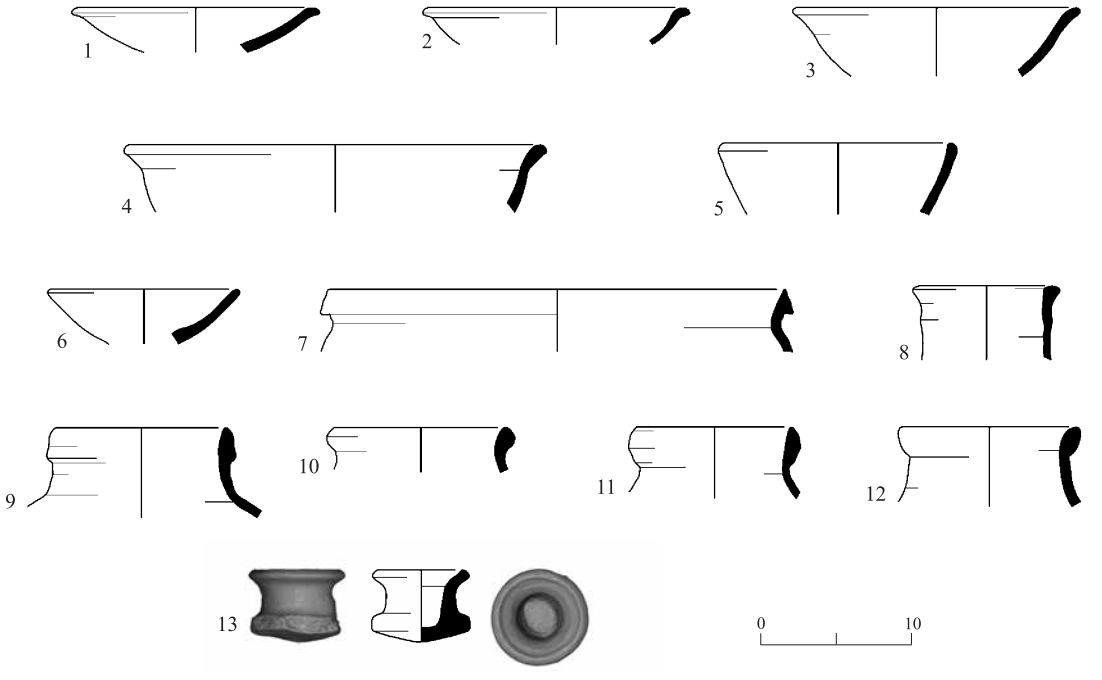

Fig. 11. Pottery from Room F (L137).

No.	Vessel	Type	Reg. No.
1	Bowl	BL2a	1039-03
2	Bowl	BL2a	1039-04
3	Bowl	BL2b	1046-02
4	Bowl	BL2b	1046-03
5	Bowl	BL3a	1046
6	Bowl	BL3	1039-01
7	Cooking pot	CP2	1046-01
8	Jug?		1039-02
9	Storage jar	SJ1	1029
10	Storage jar	SJ1	1039
11	Storage jar	SJ1	1039-05
12	Storage jar	SJ1	1046
13	Cup-and-saucer		1039-06

Type BL3c (Figs. 8:4; 12:16, 17; 14:24–26).— Open bowls with simple or slightly thickened rims and flared walls which are straighter than the more rounded walls of bowls BL3a and BL3b. One bowl (Fig. 8:4) has soot marks on the interior.

Parallels: Lakhish VII–VI (Yannai 2004: Figs. 19.27:1, 2; 19.36:3; 19.46:10; Clamer 2004a: 21.5:31); Deir el-Balaḥ IX, VI (Dothan and Brandl 2010: Pls. 11:9; 24:5; 32:4; 54:7); Tel Ẓippor IV (Yannai 2000: Fig. 2:7); Tel Mor V (Barako 2007: Fig. 3.8:5).

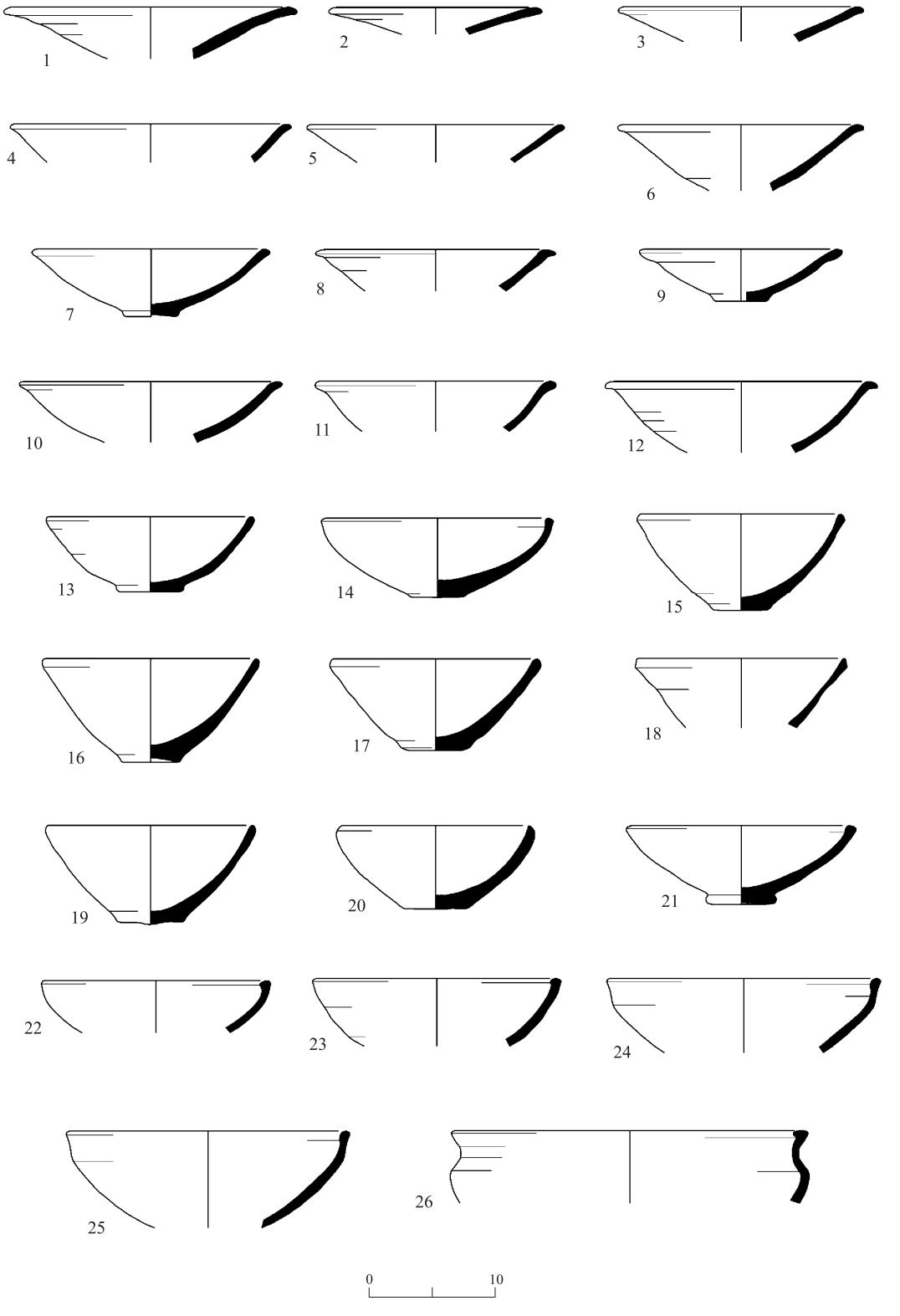

Fig. 12. Pottery from Room G (L118).

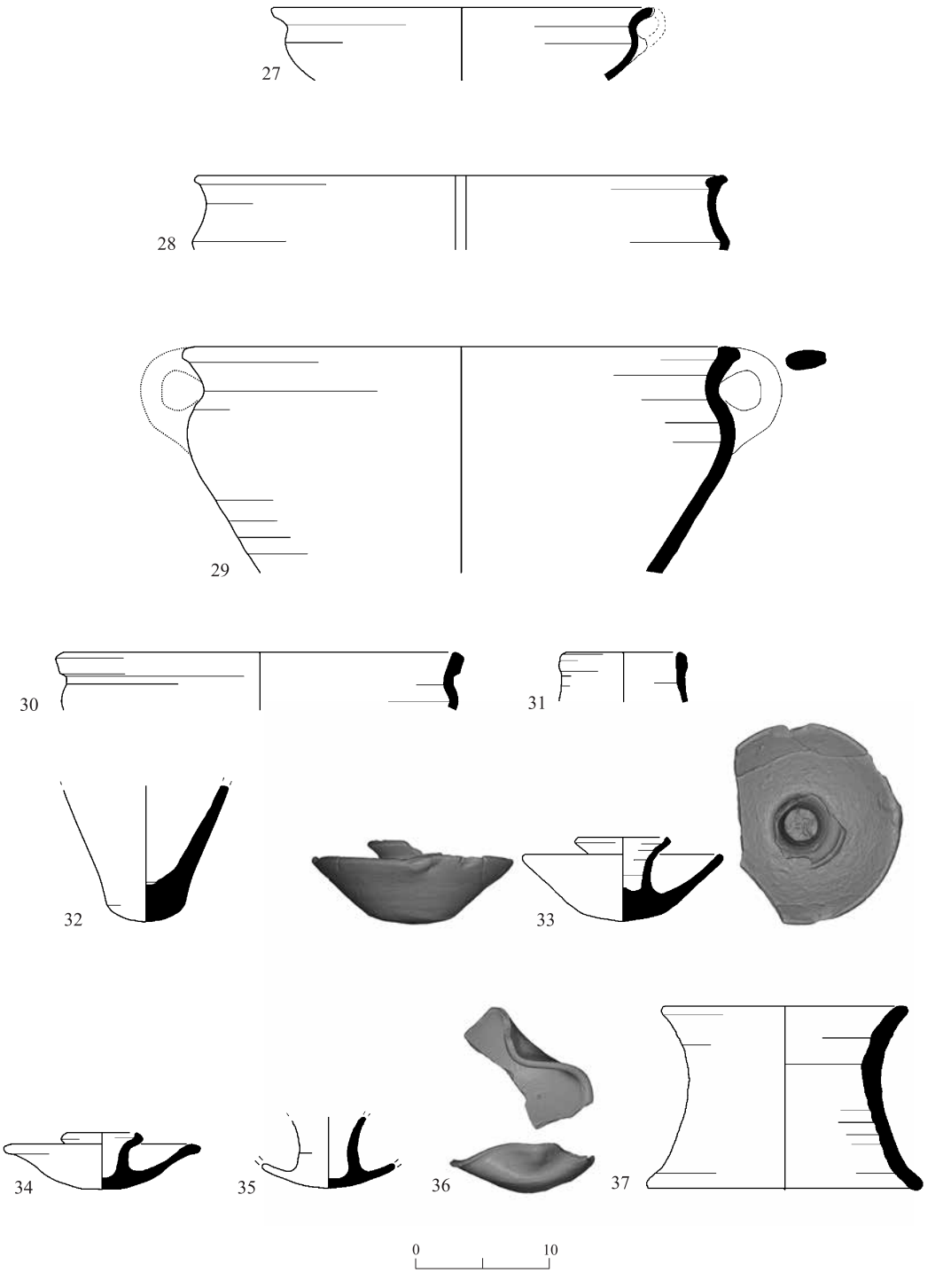

Fig. 12. (cont.).

◂ **Fig. 12**

No.	Vessel	Type	Reg. No.
1	Bowl	BL1	1013
2	Bowl	BL1	1017-05
3	Bowl	BL1	1038-04
4	Bowl	BL1	1051-06
5	Bowl	BL1	1053
6	Bowl	BL2a	1013-01
7	Bowl	BL2a	1051-03
8	Bowl	BL2a	1038-02
9	Bowl	BL2a	1051-07
10	Bowl	BL2b	1017-04
11	Bowl	BL2b	1038-05
12	Bowl	BL2b	1051-08
13	Bowl	BL3a	1051-04
14	Bowl	BL3b	1017-03
15	Bowl	BL3b	1045-04
16	Bowl	BL3c	1017
17	Bowl	BL3c	1045-02
18	Bowl	BL3c?	1038-07
19	Bowl	BL3	1017-01
20	Bowl	BL3	1051
21	Bowl	BL3	1051-09
22	Bowl	BL4a	1038-06
23	Bowl	BL4a	1045
24	Bowl	BL4b	1013-02
25	Bowl	BL4b	1051-05
26	Bowl	BL5b	1045-01
27	Bowl	BL6b	1038-03
28	Krater	KR1	1038-08
29	Krater	KR1	1051-010
30	Cooking pot	CP1	1017-02
31	Storage jar	SJ2	1013-03
32	Storage jar		1017-06
33	Cup-and-saucer		1038
34	Cup-and-saucer		1051-01
35	Cup-and-saucer		1051-02
36	Lamp		1045-03
37	Stand		1038-01

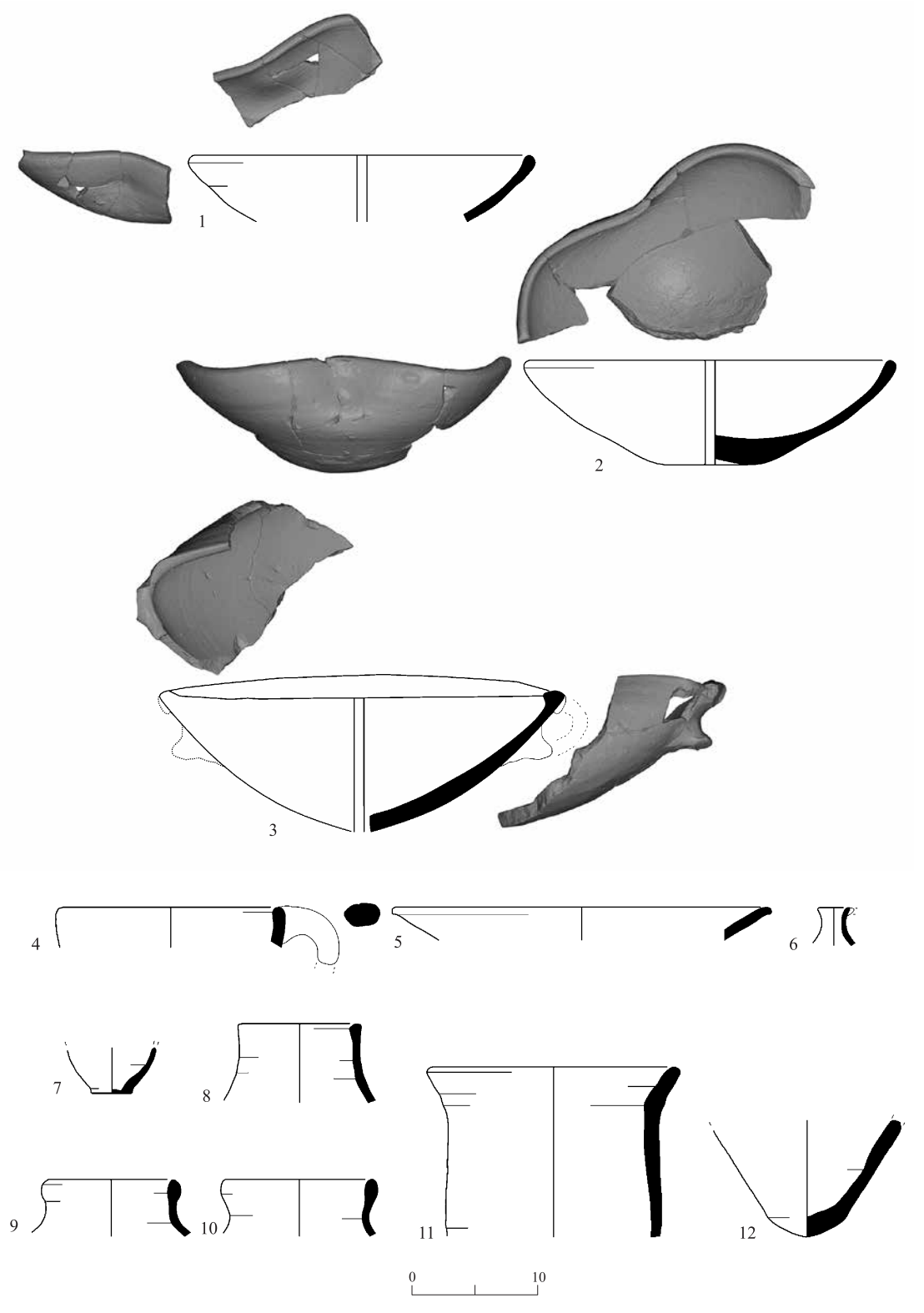

Fig. 13. Pottery from Rooms H (1–4), I (5) and J (6–12).

◂ **Fig. 13**

No.	Vessel	Type	Locus	Reg. No.	Room
1	Scoop		147	1055-03	H
2	Scoop		147	1055-02	H
3	Scoop		147	1055-04	H
4	Jug		147	1055	H
5	Bowl	BL1	148	1049	I
6	Juglet	JT2	157	1065-03	J
7	Juglet	JT2	157	1065	J
8	Jug?		155	1068	J
9	Storage jar	SJ1	157	1065-01	J
10	Storage jar		157	1080	J
11	Stand		157	1065-02	J
12	Storage jar		157	1080-01	J

Type BL4: Open Bowls with Hammer-Shaped Rims (N = 176; 8.7%)
These bowls are divided into two subtypes.

Type BL4a (Figs. 8:6, 7; 9:4; 12:22, 23; 14:27–30).— These bowls have rounded walls and a slight curve ending in a hammer-shaped rim, formed by a slight outward and inward fold, which is either subtle or leaves a clear groove on the interior rim. The rim diameter is 17–30 cm. The rim and general form of these bowls resembles the scoops, often precluding the classification of small sherds.
Parallels: Lakhish VI (Yannai 2004: Fig. 19.42:1–7; Clamer 2004a: Figs. 21.6:22; 21.11:19, 21; Ussishkin 2004a: Fig. 20.35:5–7. See also Tufnell 1958: Pl. 72:630 (LB III Cave 571)); Tel Seraʿ IX (Oren 1984: Fig. 4:7); Tell es-Safi/Gat E4a: (Gadot, Yasur-Landau and Uziel 2012: Pl. 12: 4, 6, 7); ʻAzeqa T2-3 (Kleiman, Gadot and Lipschits 2016: Fig. 4:9); Tel Miqne/ʻEqron (Ekron) VIIB (Dothan et al. 2006: Figs. 3.6:12–15; 3.8:1, 2); Gezer XIV (Dever 1986: Pl. 16:26).

Type BL4b (Figs. 10:5; 12:24, 25; 14:31, 32; 16:4).— These bowls are deeper than the BL4a bowls; they have rounded walls whose upper part is more upright and ends in a hammer-shaped rim which is drawn outward, and sometimes also slightly inward. One rim was decorated with purple ʻlipstickʼ. The rim diameter is 17–26 cm. A complete bowl (Fig. 16:4) has a flat base.
Parallels: Lakhish VII–VI (Yannai 2004: Figs. 19.24:6; 19.25:7; 19.27:9; 19.42:1–9; 19.52:6; Clamer 2004a: Figs. 21.6:22; 21.11:21); Tel Ẓippor IV (Yannai 2000: Fig. 2:10); Tell es-Safi/Gat E4b (Gadot, Yasur-Landau and Uziel 2012: Pls. 12.4:8; 12.7:3).

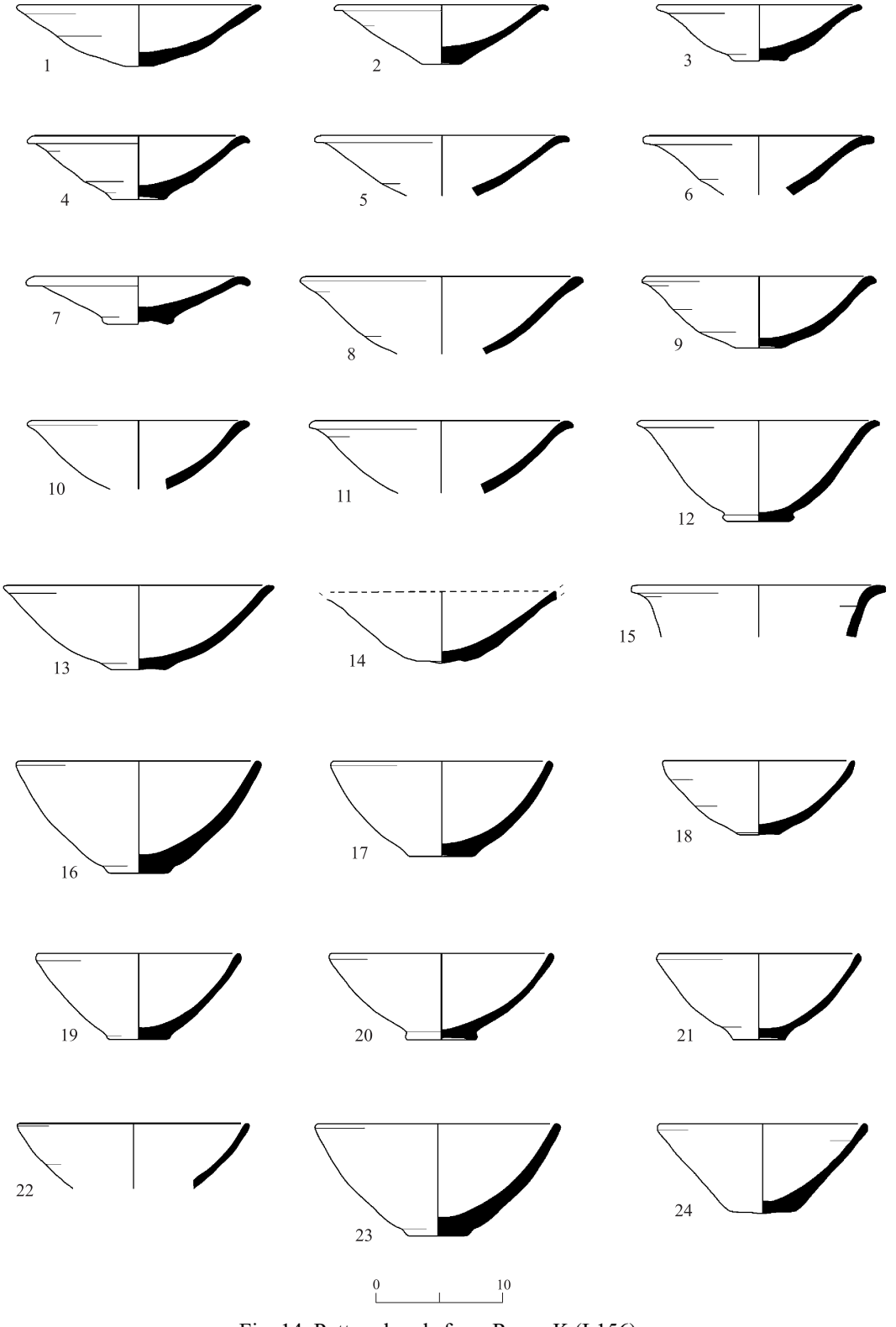

Fig. 14. Pottery bowls from Room K (L156).

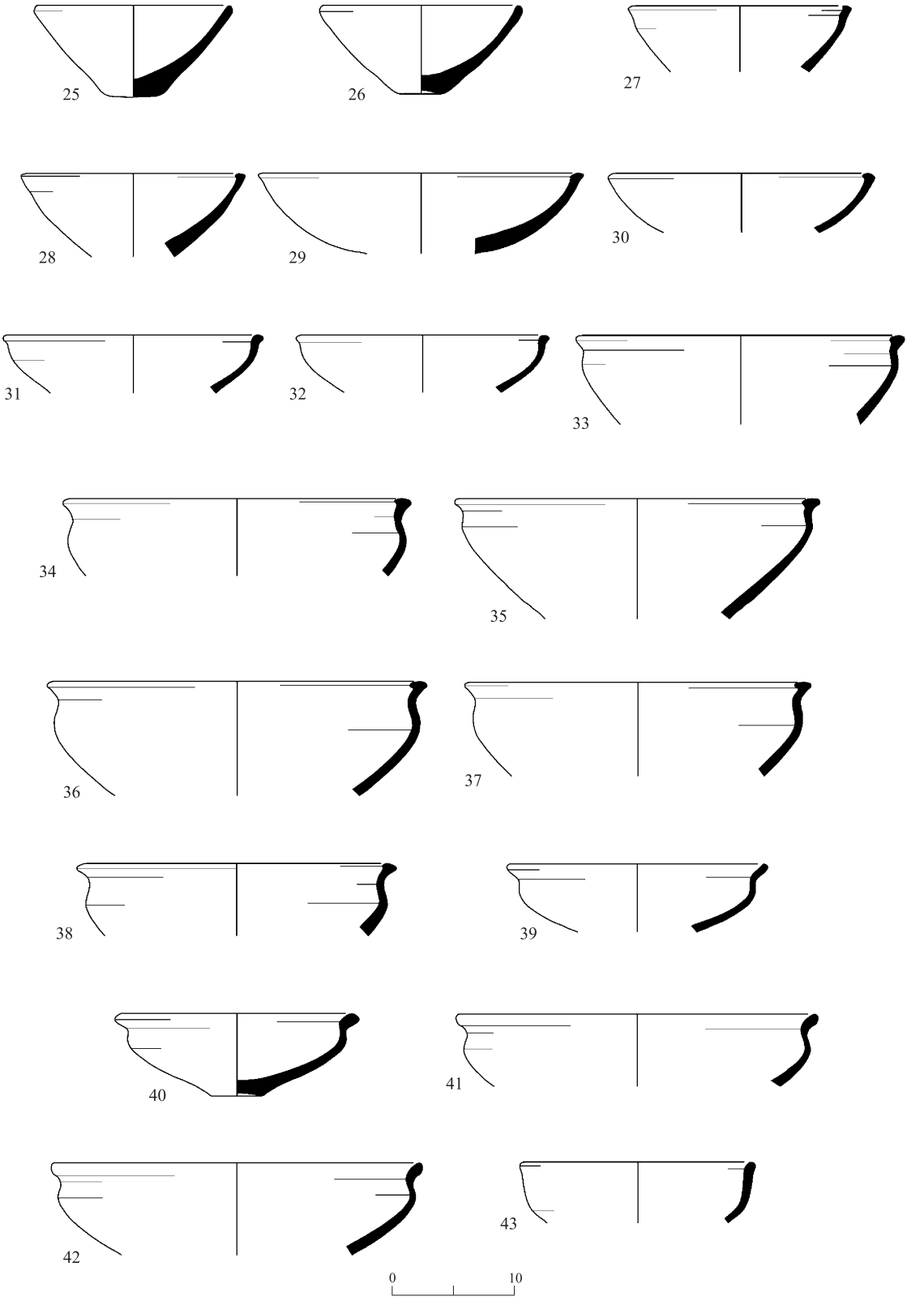

Fig. 14. (cont.).

◂ **Fig. 14**

No.	Type	Reg. No.
1	BL1	1095-016
2	BL2a	1075
3	BL2a	1090-01
4	BL2a	1089
5	BL2a	1116-01
6	BL2a	1079-03
7	BL2a	1095-015
8	BL2b	1064-03
9	BL2b	1075-01
10	BL2b	1075-02
11	BL2b	1079-04
12	BL2b	1079-02
13	BL2b	1094-03
14	BL2b	1119
15	BL2b?	1095-011
16	BL3a	1064-01
17	BL3a	1095
18	BL3a	1064-04
19	BL3a	1095-03
20	BL3a	1119-02
21	BL3a	1117
22	BL3b	1119-01

No.	Type	Reg. No.
23	BL3a	1095-010
24	BL3c	1064-02
25	BL3c	1095-01
26	BL3c	1111
27	BL4a	1079-05
28	BL4a	1079-06
29	BL4a	1094-05
30	BL4a	1094-02
31	BL4b	1095-08
32	BL4b	1118-03
33	BL5a	1118-01
34	BL5a	1116
35	BL5a	1095-05
36	BL5a	1095-06
37	BL5a	1090
38	BL5b	1118-02
39	BL6a	1117-01
40	BL6a	1114
41	BL6b	1095-07
42	BL6b	1116-02
43	BL7	1116-03

Type BL5: Carinated Bowls with Hammer-Shaped Rims (N = 67; 3.1%)
These bowls are also divided into two subtypes.

Type BL5a (Figs. 14:33–37).— The bowls have a rounded carination on the upper third of the bowl with a concave profile above the carination, and a hammer-shaped rim. The rim is similar to type BL4, and the wall profile resembles Type BL6 ('cyma- bowls'). The rim diameter is 20–28 cm.
Parallels: Lakhish VI (Ussishkin 2004a: Figs. 20.35:8; 20.36:11; Clamer 2004a: Figs. 21.6:15, 16; 21.8:7, 20); Tel Ẓippor IV (Yannai 2000: Fig. 2:8).

Type BL5b (Figs. 10:6; 12:26; 14:38).— Subtype BL5b bowls are similar in form and rim diameter to BL5a, but they have a sharper carination, this distinction only evident when the wall profile is extant. The wall profile of BL5b is similar to that of the large kraters (KR1), but with smaller dimensions. The rim diameter is 20–28 cm.
Parallels: Lakhish VI (Yannai 2004: Figs. 19.42:13; 19.47:3; Ussishkin 2004a: Fig. 20:34:5); Qubur al-Walaydah VIII (Lehmann et al. 2010: Fig. 6:3, 4); Tel Ẓippor VI (Yannai 2000: Fig. 2:4).

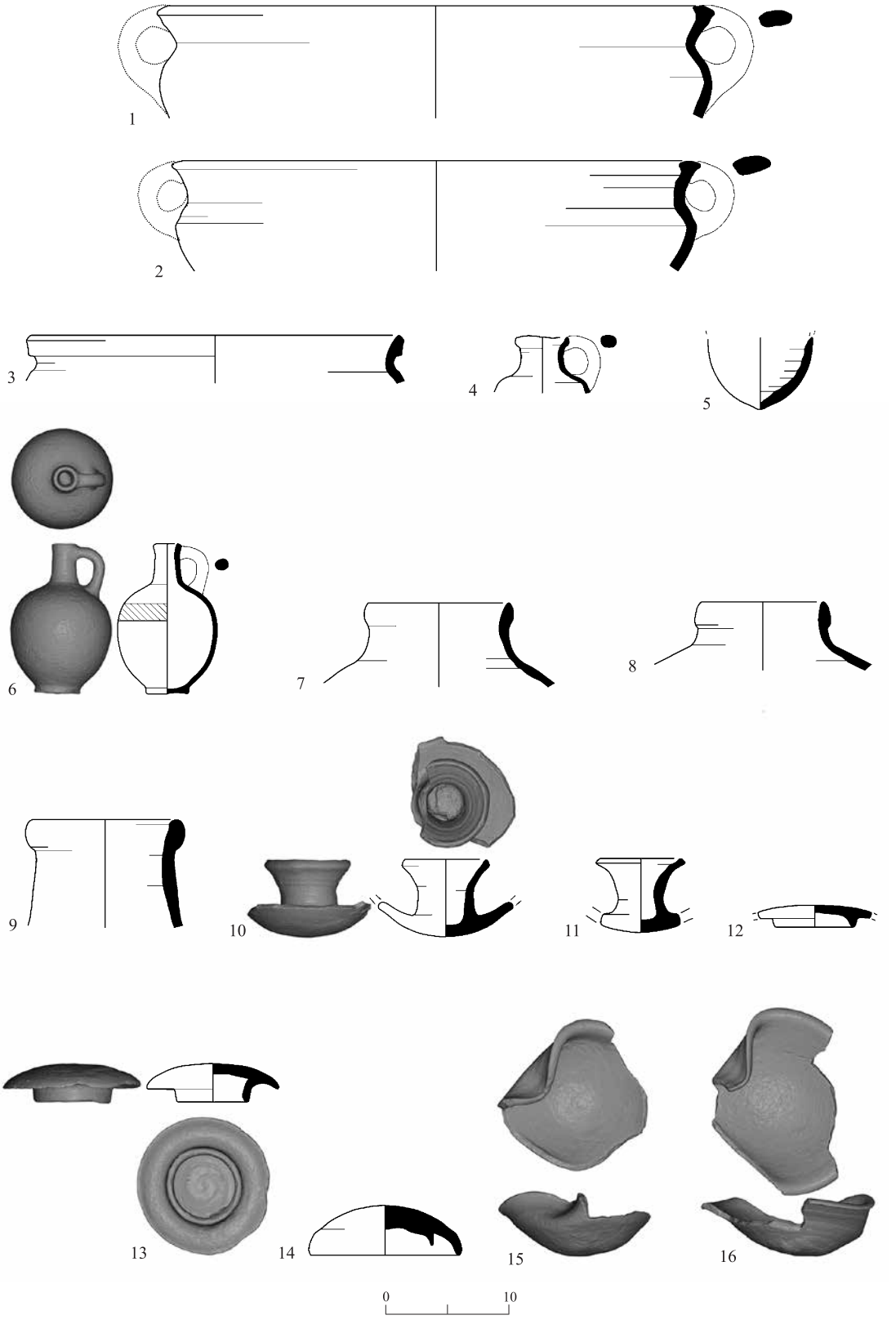

Fig. 15. Pottery from Room K (L156).

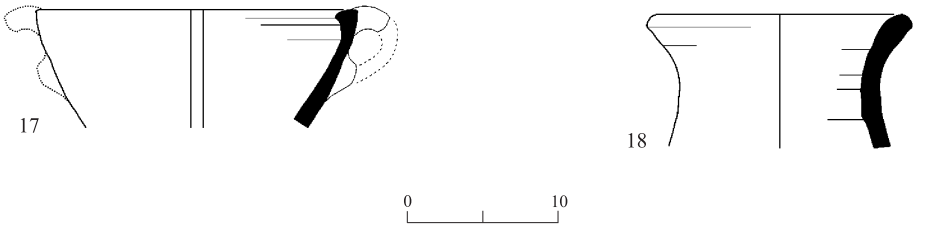

Fig. 15. (cont.).

No.	Vessel	Type	Reg. No.
1	Krater	KR1	1064
2	Krater	KR1	1079
3	Cooking pot	CP1	1094-04
4	Juglet	JT1	1118-05
5	Juglet	JT1	1095-09
6	Juglet	JT2	1088
7	Storage jar	SJ1	1094
8	Storage jar	SJ1	1079-07
9	Storage jar	SJ4	1119-03
10	Cup-and-saucer		1118
11	Cup-and-saucer		1095-04
12	Lid		1095-10
13	Lid		1115
14	Lid		1115-01
15	Lamp		1118-04
16	Lamp		1094-01
17	Scoop		1095-02
18	Stand		1079-01

Type BL6: Carinated Bowls with S-Shaped Profile (N = 27; 1.6%)
Carinated bowls, designated S-shaped or cyma-profile bowls, with a rounded carination on the upper third of the bowl and an everted rim. The type is divided into two subtypes, based on the size and the relationship between the rim and carination diameter.

Type BL6a (Figs. 9:5; 10:7; 14:39, 40).— The smaller carinated bowls with the S-shaped profile have a less pronounced carination whose diameter is usually smaller than that of the rim (rim diameter 20–24 cm). The complete bowl (Fig. 14:40) has clear scraping marks on the low flat disk base and exterior lower third of the bowl.
Parallels: Lakhish VI (Yannai 2004: Figs. 19.42:11; 19.47:3; Clamer 2004a: Figs. 21.2:20, 21; 21.11:16–18); Tell Beit Mirsim B1-2 (Greenberg 1987: Fig. 6:21); Tel Ẓippor IV–VI (Yannai 2000: Figs. 2:12; 3:7, 9; 4:11); Tell es-Safi/Gat E4b (Gadot, Yasur-Landau and Uziel 2012: Pl. 12.4:3–6); Ashdod XIII (Dothan and Ben Shlomo 2005: Fig. 3.5:8); Tel Miqne/'Eqron VIIB (Dothan et al. 2006: Fig. 3.6:18, 19).

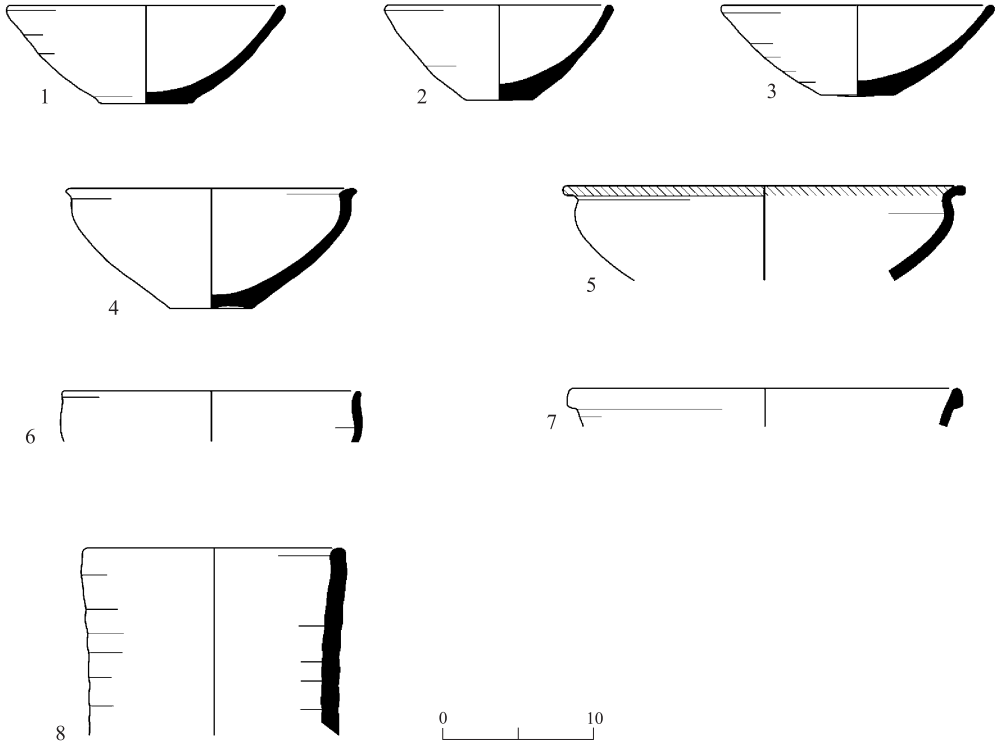

Fig. 16. Pottery from Room L (L152).

No.	Vessel	Type	Reg. No.
1	Bowl	BL3a	1092-03
2	Bowl	BL3	1092-02
3	Bowl	BL3	1092-04
4	Bowl	BL4b	1092-01
5	Bowl	BL6b	1092
6	Bowl	BL8	1096-02
7	Cooking pot	CP2	1096
8	Storage jar	SJ3	1092-05

Type BL6b (Figs. 8:8; 10:8–10; 12:27; 14:41, 42; 16:5).— Large carinated bowls with an S-shaped profile, usually having a similar rim and carination diameter (28–36 cm). Three rims have purple 'lipstick' and remnants of hand burnish, and one has remains of a small loop handle. Faded remains of two bands of wavy lines between straight parallel lines are visible on one bowl interior (Fig. 16:5), a well-known decoration on similar bowls from other sites, notably from Lakhish Levels VII and VI, where it appears on most of the large Cyma-profile bowls.

Parallels: Lakhish VII–VI (Yannai 2004: Figs. 19.23:1; 19:34:4; Yannai 2004: Figs. 19.40:1; 19.43:1, 2; 19.46:12; Clamer 2004a: Figs. 21.2:22, 23; 21.6:14; 21.11:14; Ussishkin 2004a: Fig. 20.33:14; see also Tufnell 1958: Pl. 69:555, LB II–III Tomb 527); Tel Seraʿ IX (Oren 1984: Fig. 4:12); Tell Beit Mirsim B1–2 (Greenberg 1987: Fig. 6:15, 19, 20); Tel Ẓippor

VI–V (Yannai 2000: Figs. 3:12; 4:16); Tell es-Safi/Gat E4b (Gadot, Yasur-Landau and Uziel 2012: Pl. 12.4:12); Tel Miqne/'Eqron VIIB (Dothan et al. 2006: Fig. 3.7:11–15) Tel Mor VI (Barako 2007: Fig. 3.8:6, 9); Gezer XIV (Dever et al. 1974: Pl. 25:19); Afeq X12 (Gadot 2009: Figs. 8.49:12; 8.53:6; 8.61:2).

Type BL7: Small Carinated Bowls (N = 3; 0.1%; Figs. 8:9; 14:43)
This is an uncommon small carinated bowl with a soft mid-body carination, and an upright upper wall with a slightly everted rim. The rim diameter is 14–19 cm, somewhat similar to Bowl Type BLC1 from 'Azeqa, where it is the most prevalent LB III bowl type (Kleiman, Gadot and Lipschits 2016:113).
Parallels: Lakhish VII–VI (Yannai 2004: Figs. 19:39:1, 2; 19.41:21; Clamer 2004a: Fig. 21.5:10–12); 'Azeqa T2-3 (Kleiman, Gadot and Lipschits 2016: Fig. 4:4, 5); Tell es-Safi/Gat E4a (Gadot, Yasur-Landau and Uziel 2012: Pl. 12.6:9); Tel Ẓippor VI (Yannai 2000: Fig. 4:14).

Type BL8: Deep Bowls with Rounded Walls (N = 6; 0.3%; Figs. 8:10; 16:6)
An uncommon deep bowl with rounded sides and slightly everted rims; the rim diameter is 14–19 cm. The shape, especially Fig. 8:10, bears a resemblance to Philistine bell-shaped bowls, without the characteristic handles and decorations; A ring base (Fig. 8:11) found with this bowl also recalls the bases of Philistine bell-shaped bowls. However, these bowls may also be considered as a variation of BL7 or a subtype of the Type BL6 cyma-profile bowls.
Parallels: Lakhish VI (Ussishkin 2004a: Fig. 20.38:4; Clamer 2004a: Fig. 21.6:3; 21.11:11).

Kraters

Type KR1: Carinated Kraters (N = 46; 2.2%; Figs. 8:12; 10:11–14; 12:28, 29; 15:1, 2)
Several kraters of a single type were retrieved from the fortress. They have a carination in the upper third of the krater, a concave wall above the carination and an everted hammer-shaped rim. The diameter of the rim and the carination is fairly similar (34–48 cm). The general wall profile of the kraters resembles that of Type BL5b bowls, distinguished by the rim diameter, the wall thickness and the height of the concave wall between the rim and carination (c. 3 cm in Type BL5b, c. 5 cm in Type KR1)--these features clearly reflecting the larger size of the kraters, although no complete kraters were found in the fortress. Some of the krater sherds have loop handles from rim to carination (Fig. 10:13, 14; 12:29; 15:1, 2), the parallels indicating that this krater type usually has a large ring base. A few ring bases retrieved in the fortress probably belonged to these kraters. Type KR1 is the most common krater type during the later part of the Late Bronze Age at other sites in the region, first appearing at Lakhish Level VII and continuing in Level VI, when they are practically the only krater type. This krater type also continues to appear in the earlier part of Iron I (Zukerman 2012:281–282).

Parallels: Lakhish VII–VI (Aharoni 1975: Pl. 39:1; Yannai 2004: Fig. 19.27:13–17; 19.37:8; 19.43:3; 19.47:4, 5; Clamer 2004a: Figs. 21.2:20, 21; 21.3:1; 21.8:19; Ussishkin 2004a: Fig. 20.34:8–10); Qubur al-Walaydah VIII (Lehmann et al. 2010: Fig. 6:9, 10); Tel Seraʿ IX (Oren 1984: Fig.5:1, 2); Tell Beit Mirsim B1–2 (Greenberg 1987: Fig. 9:20); Tell es-Safi/Gat E4b (Gadot, Yasur-Landau and Uziel 2012: Pls. 12.7:9, 10; 12.8:11); Tel Ẓippor V (Yannai 2000: Fig. 3:16); Tel Miqne/ʻEqron VIIB (Dothan et al. 2006: Fig. 3.8:6); Tel Mor VI–V (Barako 2007: Fig. 3.15:3, 4); Gezer Stratum XV–XIV (Dever et al. 1970: Pl. 28:1; Dever et al. 1974: Pl. 25:2, 25; Dever 1986: Pl.15:10).

Cooking Pots

The 20 small sherds of cooking pots have a soft carination on the upper third of the body and an everted upper wall ending in a rim formed by an outward fold (c. 1.5 cm long). Two cooking-pot types were distinguished by their rectangular or triangular rim forms.

Type CP1: Cooking Pots with Rectangular Rims (N = 14; 0.6%; Figs. 8:13; 9:6; 12:30; 15:3)
Most of the cooking pots (70%) have rectangular rims, some plain, others with two grooves on the outer surface. The rim diameter is usually 29–30 cm, and up to 38 cm on a few larger pots. Cooking pots with rectangular rims are the most common type at Lakhish Levels VII and VI. Based on parallels from Tel Ẓippor and Tel Seraʿ, Yannai suggested that this is a local cooking pot type (Yannai 2004:1047, 1053). Parallels come from several thirteenth- and twelfth-century BCE sites in southwestern Canaan.
Parallels: Lakhish VII–VI (Aharoni 1975: Pl. 39:15–17; Yannai 2004: Fig. 19.21:15; 19.26:5, 6; 19.32:6, 7; 19.34:6; 19.47:8; Clamer 2004a: Figs. 21.6:19, 20; 21.12:7; Ussishkin 2004a: Fig. 20.34:15; see also Tufnell, Inga and Harding 1940: Pl. LVI:369, Fosse Temple III); Deir el-Balaḥ IX (Dothan and Brandl 2010: Pl. 14:10); Tel Ẓippor VI (Yannai 2000: Fig. 5:4); Tell es-Safi/Gat E4b (Gadot, Yasur-Landau and Uziel 2012: Pl. 12.7:13; 12.8:17); ʻAzeqa T2-3 (Kleiman, Gadot and Lipschits 2016: Fig. 5:4); Gezer XIV–XIII (Dever et al. 1974: Pl. 25:5; Dever 1986: Pl. 17:19); Afeq X12 (Gadot 2009: Fig. 8.56:6).

Type CP2: Cooking Pots with Triangular Rims (N = 6; 0.3%; Figs. 8:14–16; 11:7; 16:7)
The cooking pots with triangular rims are less common in the fortress (30%); the rim diameter is 28–31 cm. Cooking pots with triangular rims are the most common cooking-pot type throughout Late Bronze Age Canaan. At Lakhish, cooking pots with triangular rims first appear in Fosse Temple I (Tufnell, Inga and Harding 1940: Pl. LV B:352–357) and in Level S-3 on the tell (Yannai 2004:1038, Fig. 19.1:10; 19.5:10; 19.9:9), whilst in Levels VII and VI, this type becomes less common than Type CP1. This observation may align well with the Gal'on assemblage, although it may only be coincidental due to the small cooking-pot assemblage.
Parallels: Lakhish VII–VI (Yannai 2004: Figs. 19.26:4; 19.37:1; 19.47:9; Clamer 2004a: Figs. 21.3:2; 21.12:8); Tel Seraʿ IX (Oren 1984: Fig. 5:4, 5); Deir el-Balaḥ VI, IV (Dothan

and Brandl 2010: Pls. 28:7; 41:1); Tell es-Safi/Gat E4b, E4a (Gadot, Yasur-Landau and Uziel 2012: Pls. 12.6:12, 15; 12.7:14, 15); 'Azeqa T2-3 (Kleiman, Gadot and Lipschits 2016: Fig. 5:3); Tel Baṭash/Timna VI (Panitz-Cohen 2006: Pl. 56); Tel Mor VI (Barako 2007: Fig. 3.20:3–11); Gezer XIV (Dever 1986: Pls. 14:8; 16:21); Afeq X12 (Gadot 2009: Figs. 8.53:12; 8.64:6, 7).

Juglets

Two juglet types were retrieved: dipper and globular.

Type JT1: Dipper Juglets (N = 1; 0.5%; Fig. 15:4, 5)
The upper part and the rim of a dipper juglet found in Room K has defined shoulders, a flared neck with a plain trefoil rim and a loop handle; three other handles (one in Room E, and two in Room G), and three slightly tapered bases of these juglets were found (two in Room A and one in Room D). Although uncommon at Gal'on, these dipper juglets are a well-known Late Bronze Age type.
Parallels: Lakhish (Tufnell, Inga and Harding 1940: Pl. LII:316, Fosse Temple III; Tufnell 1958: Pl. 78:789, LB II–III Pit 542; Tufnell 1958: Pl. 78:792, LB III Cave 559); Tel Ẓippor V (Yannai 2000: Fig. 3:18–20); 'Azeqa T2–3(Kleiman, Gadot and Lipschits 2016: Fig. 5:5).

Type JT2: Globular Juglets (N = 2; 0.8%; Figs. 13:6, 7; 15:6)
Three examples were found: an intact juglet in Room K, and two fragments—an upper part and a lower part, probably of the same juglet—in Room J. Both juglets have a globular body with a flat disc base, a narrow neck and a loop handle from the rim to shoulder, but they differ in some features: the intact juglet has an upright simple rim (diam. 2 cm) and a long neck (height 3.5 cm), while the other juglet has a slightly everted rim (diam. 2.5 cm) and a shorter neck (height c. 2.5 cm). The intact juglet, although mostly covered with a thick layer of hard whitish patina, is characterized by a very light whitish yellow color, on which remains of brown-reddish painted decoration are just visible. The decoration on the upper third of the body seems to include a horizontal band, possibly composed of two thick lines confining two narrow lines, and one faded horizontal line is just visible on the upper part of the handle.

This type of juglet is not common in contemporary pottery assemblages of the Southern Levant. Parallels are known from twelfth-century BCE assemblages at some other sites in the region. At Lakhish, similar juglets came mostly from tombs, whilst one undecorated juglet of this type, and a fairly similar decorated jug (height 17 cm; Yannai 2004: Fig. 19.48:3), were found in Level VI in Area S on the mound (Yannai 2004: Fig. 19.52:5). Two juglets were also found in the Level VI North-East Temple in Area BB (Weissbein et al. 2019:95, Fig. 24; Garfinkel et al. 2021: Figs. 17, 18:17). Similar juglets were also found in the twelfth-century BCE assemblages at Tel Sera', 'Azeqa and Ashqelon. As suggested by Kleiman, Gadot and Lipschits (2016:117), the Type JT2 juglets seem to imitate an Aegean

juglet type, both in their shape and in their simple horizontal-line decoration (Furumark 1941: Fig. 6:120, 123).
Parallels: Lakhish VI (Yannai 2004: Fig. 19.52:5; 19.48:3; Garfinkel et al. 2021: Figs. 17, 18:17; LB Pit 7005: Tufnell 1958: Pl. 76:726; LB III Cave 570: Tufnell 1958: Pl. 76:725); Tell el-Farʿah (South), Dynasty XIX–XX Tombs 955, 970 (Starkey and Harding 1932: Pl. 87: N3, N5); Tel Seraʿ IX (Oren 1984: Fig. 7:4); Deir el-Balaḥ LB II Tomb 116 (Dothan 1979: Ills. 86, 93); ʻAzeqa T2–3 (Kleiman, Gadot and Lipschits 2016: Fig. 5:8–10); Ashqelon Phase 20 (Master, Walton and Yasur-Landau 2020: Fig. 6.63:1).

Stirrup Jar (N = 1; 0.5%; Fig. 10:15)

A single sherd of what seems to be a neck fragment of a locally produced stirrup jar was found in Room D. It consists of a hollow ʻfalse neckʼ sealed at the top with a slightly domed disc (diam. 2.5 cm) from whose edge a handle emerges. The disc bears a faded purple decoration, probably of a circle with a central dot or spiral. Although stirrup jars usually have two handles, no clear sign of a second handle was observed.

The original Aegean LH IIIB stirrup jars were imported into the region in the Late Bronze Age down to the late thirteenth century BCE (Leonard 1994:47–79; Stockhammer 2019:237), while in the earlier part of the twelfth century BCE, the imported Cyprus LH IIIC vessels are found in the northern valleys and the Carmel Coast, and not in the southern coastal area and the Shephelah (Stockhammer 2019:240–241). Locally produced stirrup jars may appear in Canaan at the end of the thirteenth century BCE (Oren 1973:112–113, 131), gradually becoming more common during LB III and especially in Iron I. Their major appearance in Canaan, specifically in southwestern Canaan, seems to be related to the Philistines, as the few earliest examples appeared as part of the ʻPhilistine 1ʼ decorated ware assemblage in Ashqelon Phase 20, ʻEqron VIB, and Ashdod XII. Subsequently, stirrup jars are more common in the ʻPhilistine 2ʼ assemblages, appearing especially in the region of Philistia, at Tell es-Safi/Gat E3, Ashdod XII, Tel Baṭash V, as well as in and at Gezer XI and Tell Qasile XI. Notably, local stirrup jars do not appear in the LB III strata at Lakhish VI, ʻAzeqa T2–3 and Tel Seraʿ IX.
Parallels: Ashqelon Phase 20 (Master, Walton and Yasur-Landau 2020:217, Fig. 6.53:1, 2); Tell es-Safi/Gat E3 (Zukerman 2012: Pl. 13.20:13); Ashdod XIIIb–XII (Dothan and Porath 1993: Figs. 17:8–10; 31; Dothan and Ben Shlomo 2005:89, Fig. 3.14:3); Tel Miqne/ʻEqron VIB (Dothan and Zukerman 2004: Figs. 30:1; 31:2–4); Tel Baṭash/Timna V (Panitz-Cohen 2006: Pl. 71:15); Gezer XI (Dever 1986: Pl. 36:5); Tell Qasile XI (Mazar 1985b: Fig. 21); Bet Sheʼan Northern Cemetery (Oren 1973:112–113, 131, Figs. 41:9, 10; 42b:24).

Jugs (N = 14; 1.0%; Figs. 8:19–22; 13:4)

The few jug fragments could not be defined as distinct types. Most of the jug sherds have straight or slightly flared necks, with trefoil rims that are slightly thickened on the exterior.

A few sherds include part of a handle that emerges from the rim or slightly below it; the bases were button-shaped or flat disc bases. The button-shaped bases, and the rim and handle fragments, recall large jugs from Lakhish Levels VII and VI (Yannai 2004: Figs. 19.26:7; 19.48:1, 2), and 'Azeqa Stratum T2–3 (Kleiman, Gadot and Lipschits 2016: Fig. 6:1, 2). Whilst the flat disc base in Fig. 8:21 recalls the local imitations of Base-Ring Jugs known from twelfth-century BCE contexts, their distinctive decoration was not observed. Parallels are found, for example, at tombs near Lakhish (Tufnell 1958: Pls. 81:885; 82:902) and in 'Azeqa Stratum T2–3 (Kleiman, Gadot and Lipschits 2016: Fig. 5:7).

Storage Jars

The storage-jar sherds, distributed in all the rooms, are classified into four types (Table 3). Most of the examples are local, defined by the rims as Type SJ1 (61 examples; 81% of the jars), and a few belong to Type SJ2 (9 examples; 8.7%). Apart from the rims, several simple loop handles, and large heavy button-like shaped jar bases with a coarse interior, were retained; the jar bases are characteristic of LB II storage jars that continue to appear in the early part of the twelfth century BCE, as, for example, at Lakhish VI, Tell es-Safi/Gat E3 (Zukerman 2012:291, Pl. 13.3:5, 6), 'Azeqa T2–3 (Kleiman, Gadot and Lipschits 2016: Fig. 6:4, 5) and Gezer XII (Dever 1974: Pl. 34:12, 15). The other two jar types, SJ3 (4 examples; 5.8%) and SJ4 (1 example; 3.6%) are represented by a few fragments that possibly come from two Egyptian-style storage-jar types; SJ3 seems to be locally produced, while SJ4 may be imported.

Type SJ1 (N = 61; 5.2%; Figs. 8:23–26; 9:7–9; 10:16, 17; 11:9–12; 13:9; 15:7, 8)
These storage jars have a rounded shoulder, a short neck and a defined thickened rim with a round or oval contour, sometimes featuring a few subtle ridges. The rim diameter ranges between 8 to 13 cm. The Type SJ1 storage jars constitute the overwhelming majority (81.7%) of the jars in the Gal'on assemblage, and they are the typical and almost exclusive storage jars throughout the Southern Levant in the Late Bronze Age, specifically in LB II–III contexts, thus designated the 'Canaanite jar' (Amiran 1969:140–141, Pl. 43; Panitz-

Table 3. Storage Jars

Type	No. of Examples[i]	%[ii]
SJ1	61	81.7
SJ2	9	8.7
SJ3	4	5.8
SJ4	1	3.6
Total	*75*	*100*

[i] No. of rims.
[ii] Percentage based on rim-circumference (Rm/Cf) calculation.

Cohen 2006:77–81). This jar type continues to appear in the early part of Iron I, alongside other storage jar types (Mazar 2015:14–15, Pl. 1.1:16–18).
Parallels: Lakhish VI (Yannai 2004: Fig. 19.49; 19.50:1–7, 19; Clamer 2004a: Fig. 21.3:14–15; LB III Tomb 532: Tufnell 1958: Pl. 87:1020); Tel Seraʿ IX (Oren 1984: Fig. 5:6); Ashdod 6 (Area H) (Dothan 1971: Fig. 83:1–3); ʻAzeqa T2–3 (Kleiman, Gadot and Lipschits 2016: Fig. 6:4); Afeq X12 (Gadot 2009: Fig. 8.52:1).

Type SJ2 (N = 9; 0.6%; Figs. 8:27; 12:31)
These storage jars have a slightly thickened rim that is less profiled than Type SJ1; the rim diameter ranges between 9 to 12 cm. Similar storage jars are found in LB IIB–III and Iron I assemblages, appearing in Tel Baṭash Strata VI and V, where this jar was understood as an intermediate type between the earlier Late Bronze Age ʿCanaanite jar' (Gal'on Type SJ1) and the later Iron I plain-necked jars (Gal'on Type SJ3; Panitz-Cohen 2006:86–87).
Parallels: Tell es-Safi/Gat E3 (Zukerman 2012: Pl.13.3:2, 3); Tel Mor VI–V (Barako 2007: Fig. 3.25:4–6); Tel Baṭash/Timna VI–V (Panitz-Cohen 2006: Pls. 57:2; 63:1, 4, 8); Afeq X12 (Gadot 2009: Figs. 8.55:7; 8.65:4); ʿIzbet Ẓarṭah III (Finkelstein 1986: Fig. 10:10).

Type SJ3: Tall-Necked Jar(?) (N = 4; 0.4%; Fig. 16:8)
A few large fragments may come from a storage jar/s with a simple plain rim (diam. 17 cm). One high neck (12.5 cm high) has thick, slightly everted walls, ribbed inside and out, and a rather crude, slightly folded outward and inward rim; remains of whitewash are visible on the exterior. There are some clay lumps on the inner rim left by careless smoothing. The jar fragments may come from a large, Egyptian-style tall-necked jar, possibly a funnel-necked or a bag-shaped jar (Martin 2011: Type JR4, 61–63; Oren 2019:277–279). These jar types are common in Egypt during the Dynasties XIX–XX, also appearing in various sizes in the Southern Levant, especially in Bet She'an, where the jars were usually red-slipped (Martin 2009:449–451). Since Egyptian-style jars are much less common than Egyptian-style bowls and their distribution is more limited, they may reflect a clearer indication of an Egyptian presence (Martin 2011:51).
Parallels: Tel Seraʿ IX (Oren 1984: Fig. 7:2); Bet She'an S-4 (Panitz-Cohen 2009: Pl. 30:7, 8); Tell es-Saʿidiyeh Tomb 117 (Pritchard 1980: Fig. 21:1).

Type SJ4: Egyptian Amphora (N = 1; 0.2%; Fig. 15:9)
A single large sherd with a tall neck and a thickened rim is classified as Type SJ4. The form and the fabric of this fragment are unique in the assemblage, both pointing to the Egyptian origin of this vessel. The neck is at least 9 cm tall while the neck of the local Type SJ1 jars is much shorter (c. 4 cm), and the thickened rolled rim is significantly thicker and more pronounced. The form seems to recall Egyptian amphorae that are characterized by taller necks than their Canaanite counterparts (Martin 2011:73–77; Aston 2004). The neck widens slightly toward its base, possibly indicating that it had an inflated neck, a feature characteristic of Dynasty XX amphorae (Martin 2011: Type AM2b). The fabric is a hard 'metallic' material with a

pink-whitish color on the exterior and brown on the interior; the section has brown-orange edges and a gray to blackish core with white limestone inclusions and air pockets. Visually, it differs considerably from that of the rest of the assemblage, and it may be the fabric group designated Marl D, to which most of the Egyptian, Ramesside-period imported pottery found in the Southern Levant belongs (Martin 2011:93, 96, Fig. 49:4, 6).

Cup-and-Saucers (N = 6; 1.5%; Figs. 8:28; 11:13; 12:33–35; 15:10, 11)

Rim fragments of six cup-and-saucers were found in the assemblage—one in Room F and three in the adjoining Room G and two in Room K—and a single base fragment in Room A. The cup-and-saucer vessels are composed of a cup attached to an open bowl or saucer; the cylindrical cup has a flaring rim, usually with an inner gutter, the simple rim of the cup in Fig. 12:33 being slightly pinched. The saucer has flaring sides with an everted or plain rim, and the rounded base usually exhibits negative marks of the chopped straw that was mixed in the clay. The interior of one cup was carelessly smoothed, leaving clay lumps, and its rounded base had chopped-straw negatives (Fig. 15:10); the inner rim of another cup was blackened by soot marks (Fig. 12:34).

Cup-and-saucers are found in shrines and temples, as, for example, in the Lakhish Fosse Temple III, and in foundation deposits and domestic and funerary contexts, and are consequently understood as cultic objects used for libation rituals, as incense burners, and as lamps (Uziel and Gadot 2010; Kreimerman and Garfinkel 2018). Müller (2006) compares the Levantine cup-and-saucers with similar vessels known from Egypt, where they have a long history dating back to the Old Kingdom. The Egyptian vessels were made of clay, stone and metal, and were commonly understood as lamps. The non-cultic nature of the Gal'on site, and the soot marks on one vessel indicate that, at least here, the cup-and-saucers were used as lamps.

Parallels: Lakhish VII–VI (Yannai 2004: Fig. 19.28:7; Clamer 2004a: Figs. 21.3:10; 21.12:13; Fosse Temple III: Tufnell, Inga and Harding 1940: Pl. XLIV:179–182); Tel Seraʿ IX (Oren 1984: Fig. 4:6); Tel Baṭash/Timna V (Panitz-Cohen 2006: Pl. 55:11); Afeq X12 (Gadot 2009: Fig. 8.60:2).

Baking Trays

Two small sherds with dot-punctuations from Room A were probably baking trays, their small size precluding determining whether they were flat trays with short rims, characteristic of the Late Bronze Age (although rarely found), or more probably, the thinner dome-shaped baking trays known in Iron I and IIA (Zukerman 2014).

Parallels: *Late Bronze Age Flat Trays*: Lakhish Fosse Temple I (Tufnell, Inga and Harding 1940: Pl. LIV:338; P-2: Clamer 2004b: Fig. 20.4:18); Ashdod XVII (Dothan and Porath 1993: Fig. 8:24).

Parallels: Iron I–IIA Dome-Shaped Trays: ʿIzbet Ẓarṭah III (Finkelstein 1986: Fig. 12:11, 12); Bet Shemesh III (Grant and Wright 1938: Pl. XXXIX:14–16); Tel Baṭash/Timna V (Panitz-Cohen 2006: Pl. 72:16); Tell Qasile XI (Mazar 1985b: Fig. 26:20).

Lids (N = 4; 1.6%; Fig. 15:12–14)

Four lid fragments were found in Room K. The shallow lids are shaped as upside-down bowls with a rounded top, within which a smaller bowl or a circular coil was attached. The gap between the outer rim and the inner bowl or coil is c. 2 cm, which would fit a storage jar with a 7–11 cm rim diameter. One lid has clay lumps on the inner rim left by careless smoothing (Fig. 15:13). Only a few similar lids have been found, notably in Lakhish VII–VI, where they sometimes have a flat top, and contemporary strata at Gezer and Bet She'an. This very rare lid-type may also have originated in Egypt (Wodzińska 2010:158).
Parallels: Lakhish VII–VI (Tufnell 1958: Fig. 2:35; Yannai 2004a: Fig. 19.44:5–7; Clamer 2004a: Fig. 21.3:13; 21.7:11, 12; Clamer 2004b: Fig. 20.12:17); Gezer XIII (Dever et al. 1974: Pl. 27:18); Bet She'an N-3b (Panitz-Cohen 2009: Pl. 15:25).

Lamps (N = 26; 1.4%; Figs. 12:36; 15:15, 16)

The lamps have round bases with imprints of chopped straw marks and pinched flaring rims with soot marks. These lamps are characteristic of the Late Bronze Age and Iron I.
Parallels: Lakhish VI (Yannai 2004: Figs. 19.40:5; 19.48:6; Fosse Temple III: Tufnell, Inga and Harding 1940: Pl. XLV:240; LB III Tomb 561: Tufnell 1958: Pl. 73:668); Tel Seraʿ IX (Oren 1984: Fig. 4:9); Tel Ẓippor IV: Yannai 2000: Fig. 2:18–21); Tell es-Safi/Gat E4b, A5 (Gadot, Yasur-Landau and Uziel 2012: Pl. 12.4:1; Zukerman 2012: Pl. 13.4:18); 'Azeqa T2–3 (Kleiman, Gadot and Lipschits 2016: Fig. 6:6); Afeq X12 (Gadot 2009: Figs. 8.53:13, 14; 8.56:4, 5).

Scoops (N = 27; 1.6%; Figs. 13:1–3; 15:17)

The scoops are large bowls with thick rounded bases, with one side, or rarely two, bent inward, forming an asymmetrical vessel. Two loop handles were attached to the two bent back wall of the scoop. The scoop rims are somewhat hammer-shaped, inverted and sometimes slightly turned out, resembling the rims of Bowl Type BL4a, and precluding distinction between these vessels on small sherds without the asymmetrical form. However, the scoops are also characterized by thick walls and a coarsely shaped rim, sometimes with clay lumps attached to the body.

The scoop fragments were found in Rooms A, E, H, J and K, the most impressive large examples from Room H, where the scoop fragments comprised 71.4% of the pottery vessels. Large parts of scoops, but non complete, were restored, the sherds probably belonging to two to four different scoops.

Scoops are commonly understood as vessels for "scooping up grain or other dry foodstuffs" (Gitin 1993:100*), and they are rather rare vessels dating to the Late Bronze Age and Iron I. They appear in Southern Levantine pottery assemblages in LB II, specifically in the thirteenth century BCE, and continue to appear without significant changes in Iron II, with two main peak periods in LB II–III, and Iron IIB–C. Gitin (1993) defined two main types: the standard type and the composite type, the Gal'on scoops aligning to the standard type characterized by rounded bases.

Gitin observed that most of the Late Bronze Age scoops were found in cultic contexts, as, for example, Lakhish Fosse Temple III, and the temples at Tel Seraʿ X–IX and Bet She'an VII (Gitin 1993:101*–102*, Table 3). Zuckerman (2007) suggested that scoops found in the context of royal public structures were used in rituals, perhaps specifically in libations in sacred liminal spaces in the buildings, referring to the Podium Area at Ḥaẓor, the Megiddo VIIB Palace and Building B at Ras Ibn Hani (Zuckerman 2007:316–318, 322–326). Gitin, however, considered that scoops were not part of the Canaanite cultic paraphernalia, as they were not found in most temples, but only in temples at sites that functioned as "Egyptian or Canaanite frontier administrative centers". He therefore proposed an administrative use for the scoops for food distribution (Gitin 1993:101*–102*), a use also applicable in the royal contexts. This use is more patent in the later Iron IIB–C contexts, where scoops were found in clear association with public storage facilities, mostly in Judean border sites (Gitin 1993:104*–107*).

The Gal'on scoops support the secular function of the scoops for the distribution of food rations in the possible border outpost, as there is no sign of cultic activity in Room H, nor throughout the fortress.

Parallels: Lakhish VII (Clamer 2004b: Fig. 20.22:9; Fosse Temple III: Tufnell, Inga and Harding 1940: Pl. XXXIX:66; Level VI Cave 4034: Tufnell 1958: Pl. 49:9; Magrill and Middleton 2004:36.2:4); Tel Seraʿ X–IX (Gitin 1993: Fig. 4:1); Megiddo VIIB–VIIA (Loud 1948: Pls. 66:5, 6, 8; 70:5); Bet She'an (James and McGovern 1993: Fig. 8:16; 9:1, 2).

Stands (N = 24; 1.9%; Figs. 12:37; 13:11; 15:18)

The fairly crudely made, cylinder-shaped stands have thick walls with wavy surfaces and everted upper and lower rims. A complete stand from Room K was restored (diam. 20.5 cm, height 13.7 cm), and additional fragments from adjoining Rooms K and J possibly represent at least two more stands; stand fragments were also found in the large assemblage in Room G. Similar stands are common in Late Bronze Age and Iron I assemblages, and they were probably used for supporting large vessels, such as jars and kraters.

Parallels: Lakhish VII–VI (Yannai 2004: Figs. 19.29:4; Clamer 2004a: Fig. 21.4:6–8; Fosse Temple II–III: Tufnell, Inga and Harding 1940: Pl. LIII:325–326, 330, 333).

QUANTITATIVE ANALYSIS OF THE POTTERY

The quantitative analysis of the pottery assemblage aimed at assessing the quantities and percentages of the various types of vessels in the different rooms. The assemblage predominantly comprised sherds, the complete and restored vessels coming mostly from Rooms G and K, and to some extent, from Room H. A simple count of the rim sherds would not have yielded a correct percentage of the different vessel types due to their different breakage patterns; bowls, for example, often break into more rim fragments than jars or small closed vessels, which would lead to an overestimation of the percentage of bowls in the assemblage.

Consequently, the quantitative analysis was based on counting the Rim-Circumference Factor (Rm/Cf), measuring each rim sherd against the estimated rim circumference of the vessel, the latter divided into tenths (Mazar and Panitz-Cohen 2001:12–13; Panitz-Cohen 2015:99). The counting of the number of tenths preserved from each vessel's rim circumference allowed allocating each rim sherd of each type a more correct representation in the general vessel count. It theoretically also enabled estimating the possible minimum number of vessels in each context, although this is only valid for the larger pottery assemblages in Rooms G and K, and not for the rooms containing only a few sherds. The percentages of the vessel types cited in the typological descriptions (see above), and in the tables—whether in terms of the entire assemblage (Table 1, see above) or the vessel class (Tables 2, 3, see above)—are based on the calculation of the Rim-Circumference Factor. The comprehensive data, including the basic rim sherd count (N), the calculated Rim-Circumference Factor (Rm/Cf) and the resultant percentage of each vessel type in the pottery assemblage of each room (%) is provided in Tables 4–6).

THE SPATIAL DISTRIBUTION OF THE POTTERY

The spatial distribution of the different types of pottery vessels in the 11 rooms (Room B contained only two sherds) is presented in pie-charts, based on the Rm/Cf factor calculated percentages (Fig. 17). The data is presented in simplified categories (bowls, kraters, cooking pots, small closed vessels, jugs, storage jars, lamps and cup-and-saucers, lids, scoops and stands), based on the full quantitative analysis in Tables 4–6.

The spatial distribution emphasizes the special nature of Rooms G and K, two similar rear spaces separated by partition walls from Rooms F and J respectively. Exceptionally large pottery assemblages were found in Rooms G and K, together comprising c. 79.4% of the entire ceramic assemblage at the site. The assemblages included several complete vessels—some intact—found piled one atop the other in disarray (0.3–0.4 m high), mostly comprising bowls (G:91%; K:84%), as well as a few kraters (G:1.4%; K: 1.9%), cup-and-saucers (G:2.0%; K: 0.9%), lamps (G:1.1%; K:1.9%) and stands (G:1.7%; K:2.7%). These units also contained some grinding stones (G:3; K:1), animal bones, plaster fragments, and one flint blade (K). The rest of the building contained much less pottery, mostly

Table 4. Quantitative Analysis of the Pottery Assemblage by Type, Rooms A–F[i]

Type	Room A			Room B			Room C			Room D/E			Room F		
	N.	Rm/Cf	%	N.	Rm/Cf	%	N.	Rm/Cf	%	N.	Rm/Cf	%	N.	Rm/Cf	%
BL Varia	4	4	2.8							2	2	2.3			
BL1	5	5	3.5				1	1	2.5				2	2	2.8
BL2	12	12	8.4				2	2	5.0	12	13	14.9	8	8	11.1
BL3	40	40	28.0	1	1	50.0	17	20	50.0	17	17	19.5	12	12	16.7
BL4	10	10	7.0				2	2	5.0	3	3	3.4	1	1	1.4
BL5	12	12	8.4	1	1	50.0	2	2	5.0	9	9	10.3	5	5	6.9
BL6	2	2	1.4							5	5	5.7			
BL7							1	1	2.5						
BL8	3	3	2.1							1	1	1.1			
KR1	7	7	4.9				1	1	2.5	8	8	9.2			
CP1	7	7	4.9				1	1	2.5	1	1	1.1	1	1	1.4
CP2	3	3	2.1										1	1	1.4
JT1															
JT2															
Stirrup jug										1	10	11.5			
JG	2	3	2.1							4	4	4.6	5	7	9.7
SJ1	18	27	18.9				6	10	25.0	5	10	11.5	12	24	33.3
SJ2	4	6	4.2							2	2	2.3			
SJ3															
SJ4															
Lamps													1	1	1.4
C&S													1	10	13.9
Lids															
Scoops	1	1	0.7							1	1	1.1			
Stands															
Varia	1	1	0.7							1	1	1.1			
Total	*131*	*143*	*100.0*	*2*	*2*	*100*	*33*	*40*	*100*	*72*	*87*	*100.0*	*49*	*72*	*100.0*

[i] Abbreviations: Rm/Cf = rim-circumference factor; C&S = cup-and-saucer.

sherds, and the assemblages differed, comprising a variety of bowls (53.7%), storage jars (22.6%), kraters (4.2%) and cooking pots (3.9%). The assemblages in front Rooms F and J differs from those in Rooms G and K, containing many storage jars (F:33.3%; J:38%), some jugs (F:9.7%; J:5%) and juglets (J:17%), as well as a few scoops in Room J (12%); more scoops were found in Room H, a small room next to Room F, where scoops comprised c. 72% of its assemblage. This may reflect the distribution of grain or other dry foodstuffs, possibly as food rations, the grain itself, possibly stored in Rooms G and K,

Table 5. Quantitative Analysis of the Pottery Assemblage by Type, Rooms G–K[i]

Type	Room G			Room H			Room I			Room J			Room K		
	N.	Rm/Cf	%	N.	Rm/Cf	%	N.	Rm/Cf	%	N.	Rm/Cf	%	N.	Rm/Cf	%
BL Varia							1	1	16.7				7	9	0.9
BL1	48	51	7.2				1	1	16.7				57	67	6.8
BL2	81	88	12.4							1	1	2.4	106	136	13.7
BL3	357	402	56.5							6	6	14.3	421	493	49.8
BL4	83	88	12.4	1	1	7.1				1	1	2.4	68	73	7.4
BL5	9	9	1.3				2	2	33.3	1	1	2.4	25	25	2.5
BL6	7	8	1.1										12	19	1.9
BL7													2	2	0.2
BL8													1	1	0.1
KR1	9	10	1.4										18	19	1.9
CP1	1	1	0.1										1	1	0.1
CP2															
JT1													1	10	1.0
JT2	1	10	1.4							1	7	16.7			
Stirrup jug															
JG	1	4	0.6							1	2	4.8			
SJ1	5	7	1.0	1	1	7.1	1	1	16.7	6	15	35.7	6	16	1.6
SJ2				1	1	7.1				1	1	2.4	1	2	0.2
SJ3													2	4	0.4
SJ4													1	5	0.5
Lamps	8	8	1.1				1	1	16.7				14	19	1.9
C&S	2	14	2.0										3	9	0.9
Lids													4	35	3.5
Scoops				5	10	71.4				5	5	11.9	15	17	1.7
Stands	3	12	1.7							2	3	7.1	19	27	2.7
Varia				1	1	7.1							1	1	0.1
Total	*615*	*712*	*100.0*	*9*	*14*	*100.0*	*6*	*6*	*100.0*	*25*	*42*	*100.0*	*785*	*990*	*100.0*

[i] Abbreviations: Rm/Cf = rim-circumference factor; C&S = cup-and-saucer.

the adjacent rear units that were possibly storage units, whose floors are slightly deeper than the rest of the rooms.

The divided rooms at Gal'on are similar to a divided room found in the North-East Temple at Lakhish VI (Weissbein et al. 2019:82), where the inner unit contained no pottery but was extremely rich in organic material. A large wooden box filled with charred seeds found in the front wing, suggests that the grain was stored in the rear rooms and the front

Table 6. Quantitative Analysis of the Pottery Assemblage by Type, Rooms L, M, Entire Assemblage, Assemblage without G, K and Units G, K[i]

Type	Room L			Room M			Entire Assemblage			Assemblage without G, K			Units G, K		
	N.	Rm/Cf	%	N.	Rm/Cf	%	N.	Rm/Cf	%	N.	Rm/Cf	%	N.	Rm/Cf	%
BL Varia							14	16	0.7	7	7	1.5	7	9	0.5
BL1							114	127	5.9	9	9	2.0	105	118	6.9
BL2	3	3	7.3				225	263	12.2	38	39	8.6	187	224	13.2
BL3	9	18	43.9	2	2	22.2	882	1011	46.8	104	116	25.4	778	895	52.6
BL4	4	6	14.6	3	3	33.3	176	188	8.7	25	27	5.9	151	161	9.5
BL5	1	1	2.4				67	67	3.1	33	33	7.2	34	34	2.0
BL6	1	1	2.4				27	35	1.6	8	8	1.8	19	27	1.6
BL7							3	3	0.1	1	1	0.2	2	2	0.1
BL8	1	1	2.4				6	6	0.3	5	5	1.1	1	1	0.1
KR1	2	2	4.9	1	1	11.1	46	48	2.2	19	19	4.2	27	29	1.7
CP1	2	2	4.9				14	14	0.6	12	12	2.6	2	2	0.1
CP2	2	2	4.9				6	6	0.3	6	6	1.3			
JT1							1	10	0.5				1	10	0.6
JT2							2	17	0.8	1	7	1.5	1	10	0.6
Stirrup jug							1	10	0.5	1	10	2.2			
JG	1	1	2.4				14	21	1.0	13	17	3.7	1	4	0.2
SJ1				1	1	11.1	61	112	5.2	50	89	19.5	11	23	1.4
SJ2							9	12	0.6	8	10	2.2	1	2	0.1
SJ3	2	4	9.8				4	8	0.4	2	4	0.9	2	4	0.2
SJ4							1	5	0.2				1	5	0.3
Lamps				2	2	22.2	26	31	1.4	4	4	0.9	22	27	1.6
C&S							6	33	1.5	1	10	2.2	5	23	1.4
Lids							4	35	1.6				4	35	2.1
Scoops							27	34	1.6	12	17	3.7	15	17	1.0
Stands							24	42	1.9	2	3	0.7	22	39	2.3
Varia							4	4	0.2	3	3	0.7	1	1	0.1
Total	*28*	*41*	*100.0*	*9*	*9*	*100.0*	*1764*	*2158*	*100.0*	*364*	*456*	*100.0*	*1400*	*1702*	*100.0*

[i] Abbreviations: Rm/Cf = rim-circumference factor; C&S = cup-and-saucer.

rooms served for the access and operation of the granary. It is possible that the inner rear wing at Gal'on was initially used for grain storage, and that the concentration of pottery vessels found there reflects an unclear activity occurring on the eve of the fort's abandonment, rather than representing the routine life of the building.

In Room A, the assemblage is primarily composed of bowls (61.1%), followed by storage jars (22.9%). The rather significant amount of cooking pots (6.9%), together with the oven

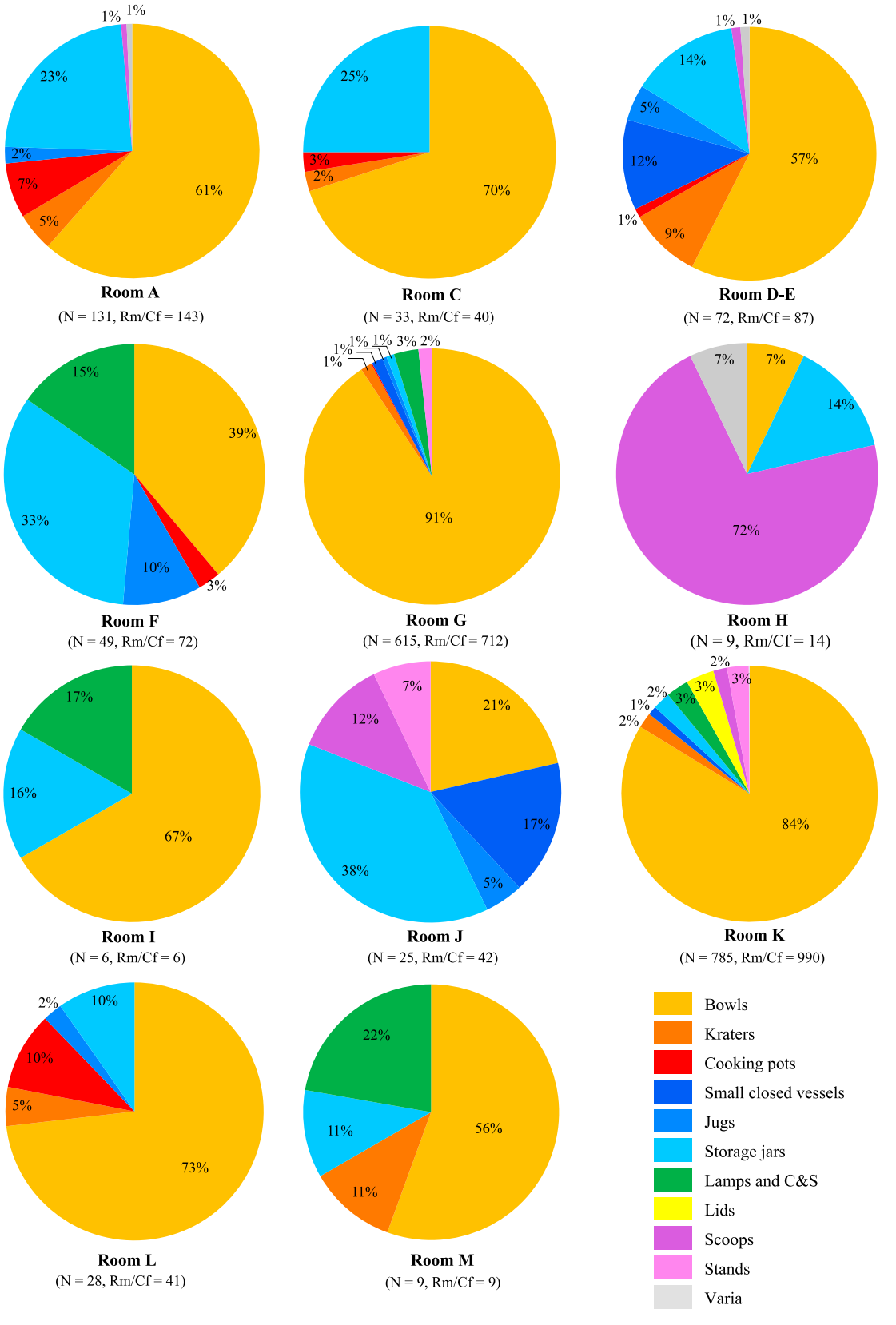

Fig. 17. Spatial distribution of the pottery assemblage.

found in the northeastern corner of the room, possibly attest to some food preparation and consumption in this part of the building.

The large central Room D/E also shows a significant percentage of bowls (57.4%), storage jars (13.8%) and kraters (9.2%).

In Rooms I, B, L and M, only a few rims were found; those from Rooms L and M may have originated from fills beneath the building's floors. The assemblage from Room C comprised mainly bowls; Room B was found almost completely empty as it seems to be filled by a fill below the upper part of the staircase.

The rather poor assemblage retrieved from the building (apart from Rooms G and K), as well as the absence of an ash layer and burned mud-brick collapse, seems to indicate that the building was abandoned. This may also explain the absence of more valuable objects, such as scarabs, amulets and metal objects.

FLINT AND GROUNDSTONE TOOLS (Fig. 18)

The excavation yielded a small quantity of worked flint, including a core, some debitage and tools. The diagnostic items in the assemblage are several sickle blades, attributed to the group of large geometric sickles typical of flint assemblages from the beginning of the Middle Bronze Age to the end of the Iron Age (Manclossi and Rosen 2019). A few groundstone tools were also found, including a flint pounding stone, a limestone mortar and pestle, and five grinding stones, two made of *kurkar* and three of limestone.

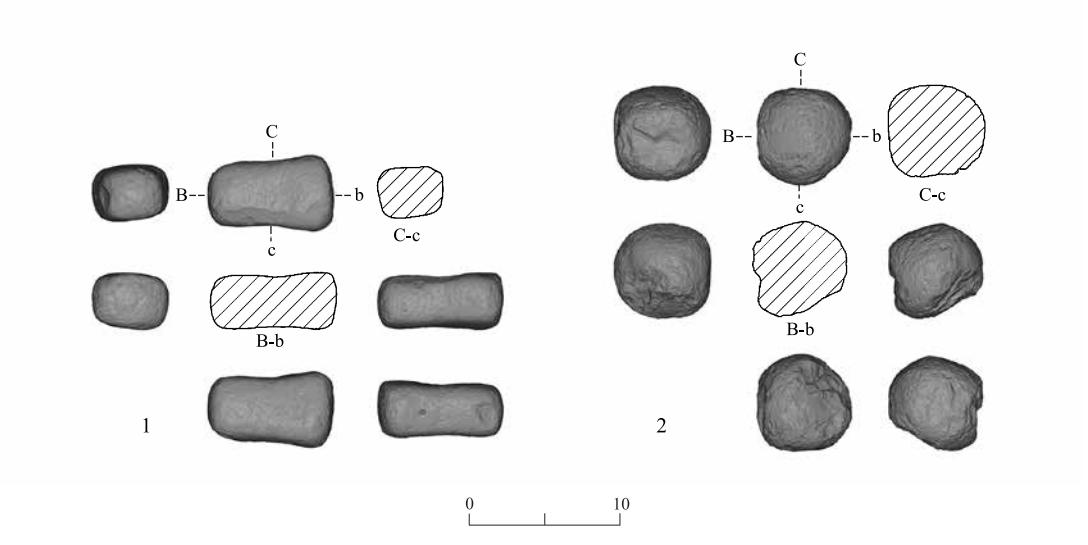

Fig. 18. Stone tools from Room D.

THE GAL'ON FORTRESS AND THE EGYPTIAN GOVERNORS' RESIDENCIES AND FORTRESSES

The Gal'on Fortress is similar in plan and dimensions to several other excavated buildings designated "Governors' Residencies", and to a few buildings that were defined as "fortresses"—all understood as associated with Egyptian imperial rule in Canaan in Dynasties XIX and XX (Table 7; Fig. 19). The buildings are located in southwestern Canaan (see Fig. 1), with the exception of the building at Bet She'an, the Egyptian garrison town located in the north.

The Governors' Residencies were identified by Eliezer Oren (1984) as a distinct group of buildings with a square plan and thick exterior walls (1.5–2.0 m wide), and a central hall surrounded by rooms, often including a staircase to an upper story. The presence of pillar bases in some buildings indicated that the central room was roofed. Some buildings had mud-brick foundations, sometimes with sand and *kurkar* in their foundation trenches, a well-known building method in Egypt (Oren 1984; Higginbotham 2000:263–264). The Governors' Residency at Bet She'an was built on stone foundations, and Egyptian-style stone architectural elements—including a lintel bearing a hieroglyphic inscription identifying the building as the residence of a senior Egyptian official—were incorporated in the walls (Mazar 2006). Hence, Egyptian architectural influence cannot be negated due to the presence of stone foundations, and these features can be understood as reflecting a combination of an Egyptian plan and a local construction method (Oren 1984:52). Typical Governors' Residencies are: Tell el-Ḥesi City IV (Fig. 19:2), Tel Sera' Strata X/IX Building 2502/906 (Fig. 19:3), Tell el-Far'ah (South) Stratum Y Building YR (Fig. 19:7) and Bet She'an Level VI Building 1500 (Fig. 19:8).[3]

Higginbotham classified the buildings featuring Egyptian-style architecture in Canaan into several types, attributing Oren's Governors' Residencies to Type 1, designated 'Center Hall Houses', which she subdivided into Type 1A—buildings with a square central unit surrounded on all four sides by rooms, and Type 1B—buildings with a rectangular central unit and rooms on two or three sides (Higginbotham 2000:265–277). She presented parallels from New Kingdom Egypt for both types, and attributed the Governors' Residencies at Tel Sera', Tell el-Far'ah (South) and Bet She'an to Type 1A, and the Tell el-Ḥesi building to Type 1B. Her attribution of a building at Tell Jemmeh Level J, associated by Oren with the Governors' Residencies (Oren 1984:46), to Type 1, was questioned and subsequently rejected by later researchers (Morris 2005:773; Blakely 2018:274).

The Gal'on building belongs to Type 1B (Fig. 19:1), together with the Tell el-Ḥesi building (Fig. 19:2). The clear similarities between the two buildings include similar external dimensions (18 × 18 m) and an almost identical internal division, comprising a

[3] Additional debatable 'governors' residencies' were identified at Tell Jemmeh (Oren 1984:46), Qubur al-Walaydah (Lehmann et al. 2010:142–148), Gezer (Singer 1986; Bunimovitz 1988) and Tell es-Sa'idiyeh (Morris 2005:762–767).

Table 7. Comparative Table of Buildings Discussed in the Text

No.	Site, Stratum	Dating	Building	Outer dimensions, main hall (m)	Wall width (m), foundations	Buttresses	Pillars	Staircase
1	Gal'on	IA IA		18.2 × 17.9, 8.7 × 4.0	1.7, stones	Four corners	Four	Corner staircase
2	Tell el-Ḥesi, IV	IA IA?		18 × 18, 5 × 9	1.5, mud bricks	One corner		
3	Tel Sera‘, X–IX	IA IA	Building 2502/906	22 × 22, 4 × 9	1.5–2.0, mud bricks		Three?	Corner staircase
4	Tel Gerisa,	LB IIB	Palace	18 × 17, 9.7 × 4.8	1.6–1.9, stones	Four corners?	One?	Corner staircase?
5	Deir el-Balaḥ, VII	LB IIB	Fortress 350/ Residency II	20.5 × 20.0	2.4, mud bricks	Four corners		Corner staircase?
6	Tel Mor, VIII–VII	LB IIB	Building B	22.5 × 22.5	2.1–2.6, mud bricks	Four corners?		Corner staircase
7	Tell el-Far‘ah, (South) Y	IA I	Building YR	22 × 25, 7 × 7	2.0, mud bricks			Corner staircase
8	Bet She'an, VI/Q1	IA IA	Building 1500	22.4 × 23.5, 8.8 × 8.2	2.0, stones		Two	
9	Afeq, X12	LB IIB	Palace VI/ Building 1104	16.0 × 14.5	1.4, stones			Corner staircase

large rectangular central unit (Gal'on Room D/E: 9 × 5 m; Tell el-Ḥesi: 9.1 × 4.6 m) with three small rooms on either side, and a large and a smaller room on the third side (Gal'on Rooms A, B/C). The Gal'on building has buttresses on all four corners, while in Tell el-Ḥesi only one corner buttress was identified. The construction technique of the buildings is significantly different: the Gal'on foundations were built of large stones, whereas at Tell el-Ḥesi, they were built of mud bricks, possibly with the use of sand in the foundation trench. No pillar bases were found in the central room at Tell el-Ḥesi, their absence probably due to the fact that only the building foundations were preserved; the pillar bases, as other architectural elements, were probably robbed for later reuse on the site (Bliss 1898:74–71; Blakely 2018:274–279).

No doorways were preserved at Tell el-Ḥesi, and Vincent (1907), followed by Amiran (1970:585), proposed that the main entrance into the building was from the east, through a large room (such as Gal'on's Room A) leading to a second entrance in the inner wing centered around a longitudinal hall, similarly to the plan of the Gal'on building. Oren suggested that the main entrance into the building was from the west, leading directly into the central hall (Oren 1984:46, Fig. 2:4); the discovery of the building at Gal'on provides support for Vincent's proposal.

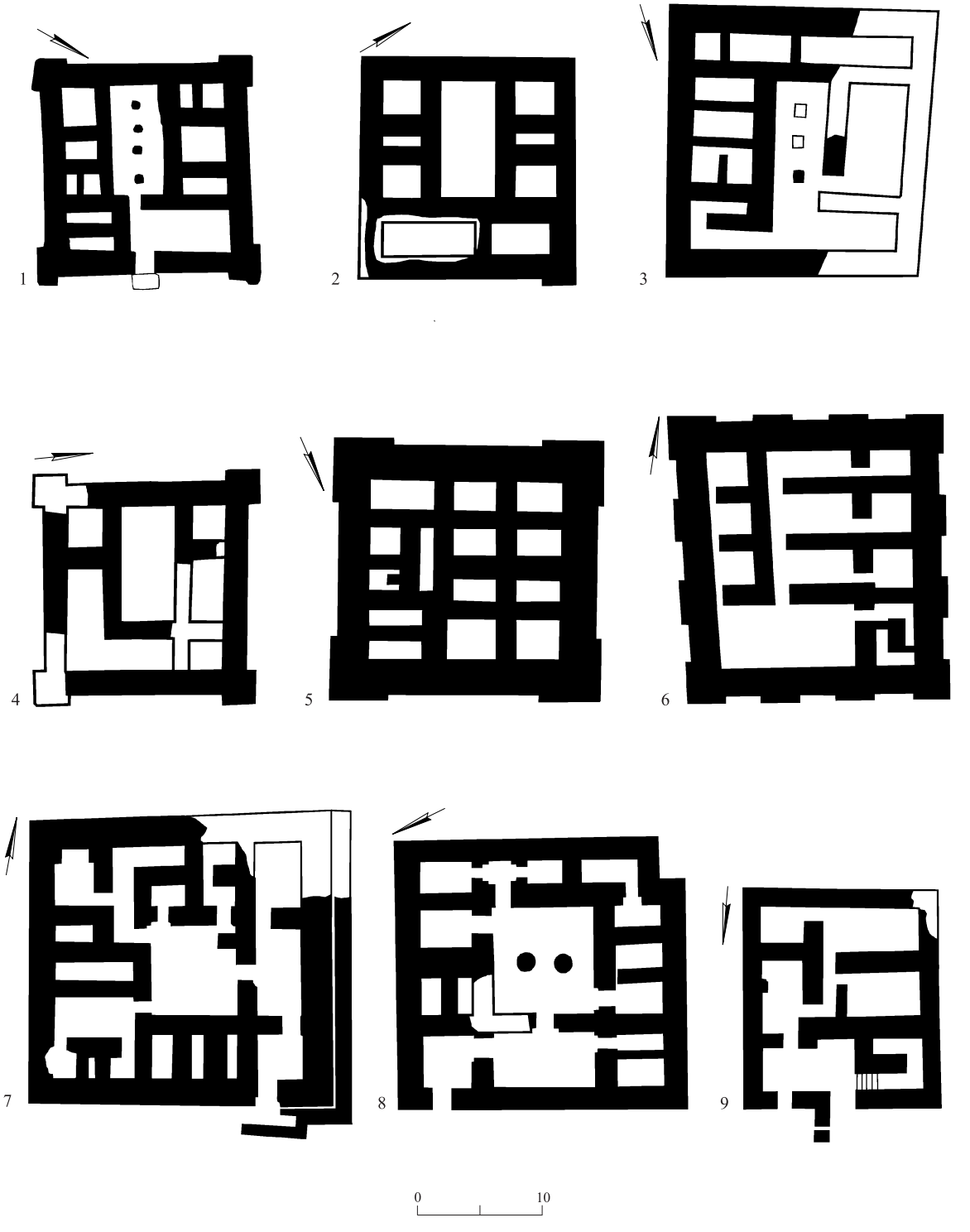

Fig. 19. Schematic plans of large thirteenth–twelfth-century BCE buildings discussed in the text: (1) Gal'on; (2) Tell el-Ḥesi; (3) Tel Sera'; (4) Tel Gerisa; (5) Deir el-Balaḥ; (6) Tel Mor; Tell el-Fara'h (South); (8) Bet She'an; (9) Afeq.

Similar to the buildings from Gal'on and Tell el-Ḥesi, the Tel Sera' Stratum IX Governors' Residency has a central rectangular room (4 × 9 m), in which one stone pillar base was found *in situ*, its position indicating that the room had a roof supported by a row of pillars, as in Gal'on (Fig. 19:3; Oren 1984:39, Fig. 2:1). Its mud-brick foundation construction technique is identical to that in the Tell el-Ḥesi building, whilst its central unit was surrounded by rooms on all four sides. The Tel Sera' building was not entirely exposed and preserved, but based on the exposed eastern part, Oren estimated its dimensions at 22 × 22 m. In addition, the location of the main entrance is not known, Oren reconstructing it on the unexposed western side, thus interpreting the large central room as a broad room. In the light of the plan of the Gal'on building, the Tel Sera' central room was probably a long hall, and based on the location of the staircase room in the northeastern corner, the entrance was probably from the north; however, it is not clear from the limited published data whether a northern entrance is possible.

The Tel Sera' Governor's Residency was built in the thirteenth century BCE (Stratum X) and continued in use in Stratum IX until it was destroyed by fire around the mid-twelfth century BCE. This dating is based on the associated pottery and hieratic inscriptions which also attest to the Egyptian affinities of the building (Goldwasser 1984; Oren 1984:41). The dating of the Tell el-Ḥesi building is not certain as only the foundations and the fills below the floors were found; Blakely proposed a thirteenth century BCE date (Blakely 2018:257), but, based on the published data, it is possible that the building also, or primarily existed in the twelfth century BCE. It is therefore reasonable to propose that all three buildings were contemporary, destroyed or abandoned at the end of the LB III, in the second half of the twelfth century BCE.

Another building that bears some resemblance to the Gal'on building is an isolated structure, identified as a 'palace', excavated at Tel Gerisa, near the Yarqon river (Fig. 19:4). Based on the preliminary publication of the building (Herzog and Tzuk 1995:53–55; Herzog 1997:183), its outer dimensions (17× 18 m) are similar to those of the Gal'on building, its thick stone wall foundations have buttresses at the corners, and it has a central rectangular room (4.8 × 9.7 m) surrounded by smaller rooms on three sides; a possible corner staircase is mentioned, although it is not represented in the published plans. The occupation of the building was dated by the finds to the latter part of the thirteenth century BCE and it was probably abandoned around the end of the century. The assemblage included a substantial amount of Egyptian-style pottery, leading to a suggestion that it was an "Egyptian Estate", similarly to the estate at nearby Afeq, at the source of the Yarqon river (Gadot 2010:60–64).

Two additional buildings—in Deir el-Balaḥ Stratum VII (Fig. 19:5; Brandl 2010:77–81) and in Tel Mor Strata VIII–VII (Fig. 19:6; Barako 2007:20–26)—have been associated with the Egyptian rule in Canaan. These two buildings have a square plan, mud-brick foundations and corner staircases, and possibly an entry hall, but unlike the Governors' Residencies, they do not have a large central room, their inner wing consisting only of small rooms. These two buildings were identified as fortresses due to their thick exterior

walls (2.1–2.4 m wide) and their protruding buttresses, and they recall depictions of Egyptian fortresses located along the "Ways of Horus" in northern Sinai, these features indeed appearing in some of the Egyptian fortresses unearthed in northern Sinai and Nubia (Dothan 1987:128–129; Hasel 1998:96–97; Barako 2007:22–23). However, Oren and Shershevski (1989) noted marked differences between the buildings at Deir el-Balaḥ and Tel Mor, and the Egyptian fortresses in Sinai and Nubia, the latter being much larger compounds surrounded by a wall with a gatehouse and usually towers and buttresses, and enclosing a large open courtyard and several structures. By contrast, the buildings at Deir el-Balaḥ and Tel Mor do not have fortified compounds or central open courtyards, and according to Oren and Shershevski, their 0.5 m projecting buttresses serve no practical military function. They suggested that these buildings were less military in nature, and more similar to Governors' Residencies, probably serving a function related to the Egyptian administrative system in Canaan, possibly as headquarters for policing and customs (Oren and Shershevski 1989:15–18).

Higginbotham and Morris associated the buildings at Deir el-Balaḥ and Tel Mor with a building uncovered at Afeq (Fig. 19:9) that, based on the finds, is usually interpreted as an Egyptian Governors' Residency or an Egyptian Estate, although it is a smaller building (15.5 × 16.5 m) built of stone without corner buttresses (Higginbotham 2000:289–290; Morris 2005:388–389, 577–580; Gadot 2009; 2010).

The slightly projecting corner buttresses at Gal'on were not towers but they rendered the building a fortified appearance recalling the Deir el-Balaḥ and Tel Mor buildings, and they may have supported balconies providing more maneuvering space, as can be seen in Egyptian representations (Yadin 1963:20). However, the Gal'on building is smaller than the Deir el-Balaḥ and Tel Mor buildings, and it has a different floor plan, including a central hall similar to the Governors' Residencies.

An important feature shared by the buildings at Gal'on, Deir el-Balaḥ, Tel Mor and Afeq (and perhaps also Tel Gerisa), is their relatively isolated location on a prominent hill, in most cases beside a stream (Barako 2007:241, Plans 1.1, 2.4; Gadot 2009:55; 2010; Brandl 2010:77, 84, Fig. 5.12). This feature distinguishes them from the Governors' Residencies built within settlements and may explain their fortified appearance.

Chronologically, the Tel Mor and Afeq buildings are dated to the thirteenth century BCE and they were destroyed at the end of LB IIB (Barako 2007:242; Gadot 2010). The date of the Deir el-Balaḥ building is disputed, Dothan and Brandl suggesting that it was constructed during the reign of Seti I at the beginning of Dynasty XIX (Dothan 1987:129; Brandl 2010:84), whilst Killebrew, Goldberg and Rosen (2006:115–117) proposed a later date at the end of the Dynasty XIX or the beginning of Dynasty XX, including during the reign of Ramesses III (the second quarter of the twelfth century BCE). The Gal'on building may date later than the Tel Mor and Afeq buildings, and may be contemporary with the Deir el-Balaḥ building.

In summary, the Gal'on building shows a close resemblance to the Governors' Residencies at Tell el-Ḥesi and at Tel Sera', and these three buildings probably functioned contemporaneously. The corner buttresses of the Gal'on building resemble the single corner

buttress at Tell el-Ḥesi, giving it a fortified appearance similar to the fortresses at Deir el-Balaḥ and Tel Mor, but their interior plans differ. The buildings at Gal'on, Deir el-Balaḥ and Tel Mor, as well as at Afeq and possibly Tel Gerisa, are all characterized by their isolated and commanding location in the landscape.[4]

The Gal'on Fortress and the Political Landscape of Southwestern Canaan

The Gal'on Fortress is located on a low spur on the southern banks of Naḥal Guvrin that runs from the Judean Mountains in the east to the Mediterranean coast in the west. It has been suggested that this stream served as the political border between the territory of Lakhish and the territory of Gat during the Late Bronze Age (Na'aman 1988:95–97; Finkelstein 1996:232; Jasmin 2006:174). Lakhish is located 6.8 km south of the building at Gal'on, and Gat (identified at Tell es-Safi)[5] is located north of Naḥal Guvrin, 8.2 km from Gal'on.

It seems that there was already some initial Philistine presence at Tell es-Safi/Gat in the first half of the twelfth century BCE, evidenced by Philistine 1 pottery (Local Mycenaean IIIC:1/Philistine Monochrome Pottery). Philistines may have already overthrown the original Canaanite elite of this city, as may be indicated by the partial destruction or abandonment of Area E Building 66323, designated a "Patrician House" (Shai et al. 2011:126; Maeir 2012b:18–19; 2020:17–20; Maeir et al. 2019:4–5, 12–13; cf. Gadot, Kleiman and Lipschitz 2018:212–213). Additional important centers of Philistine presence at this time were at 'Eqron (Stratum VII), Ashdod (Stratum XIII) and Ashqelon (Grid 38, Phase 20; Ben-Shlomo 2003:84–90; Dothan and Zukerman 2004:42–45; Stager et al. 2008:257–258).

It is possible that the construction of the isolated building at Gal'on along the Naḥal Guvrin border—exhibiting some Egyptian elements in its pottery assemblage and perhaps also in its architecture—is related to the reorganization of Canaan under Egyptian rule, possibly in the reign of Ramesses III (Morris 2005:691–705). This reorganization took place in the wake of the upheavals that accompanied the end of the Dynasty XIX and the rise of Dynasty XX, and it is represented by a wave of destruction layers throughout the

[4] Whilst the probable Egyptian influence on the plan of the Gal'on building has been highlighted here, the possibility that the building also expresses a continuation of local Canaanite architectural traditions must not be overlooked, represented mainly by the central main entrance, the use of stone foundations, and the row of stone pillar bases (Oren 1984:51–52; Higginbotham 2000:273). For example, the Gal'on building bears some resemblance to a fifteenth-century BCE building uncovered in Tel Batash, Stratum VIII, which, based on its architecture and finds, was interpreted as a high-ranking residential house (Mazar 1997:52–58, Fig. 15, Plan 13). The building has a square plan (13.1 × 13.7 m), thick stone walls, and an entrance chamber with an adjacent corner staircase along a corridor, without a central supporting wall. The building's inner wing includes a large hall (4.6 × 8.9 m) with a row of five pillars and a paved floor, and several rooms and small chambers along one side. Notably, the building is located at a commanding position on the northeastern corner of the mound, overlooking the Soreq Stream, while its northern and possibly eastern walls served as the city's outer fortifications (Mazar 1997:52). Hence it is possible that the Gal'on building continues also some elements of local Canaanite architectural traditions.

[5] For discussions and references, see Maeir 2012a:100–102.

Levant. These upheavals relate, at least partly, to the appearance of the "Sea Peoples," and the Philistines among them, who settled in the southern coastal plain (Mazar 1985a:101–102, 107; Stager 1995:334–335; Barako 2007:242; Bunimovitz and Lederman 2014; Gadot, Kleiman and Lipschitz 2018:212).[6]

According to this interpretation, the Gal'on Fortress on the border may have been part of the renewed deployment of the Egyptian and subordinated local forces, overlooking the area of Gat and 'Eqron that had just been taken by the Philistines. The building may have been occupied by an Egyptian military force, or more plausibly by a local Canaanite force associated with the city-state of Lakhish (Level VI) that was under Egyptian patronage (Ussishkin 2004b:64–65; Morris 2005:391).

The similarity between the Gal'on building and the Governors' Residencies at Tel Sera' and Tell el-Ḥesi suggests that the three buildings may have been built under Egyptian or 'Lakhishite' state auspices to control the border of the Canaanite city-state of Lakhish, specifically facing the Philistine territories to the north and west, as well as other possible Canaanite centers and nomadic groups on the southern frontier. The three buildings were engaged in guarding and monitoring the immediate environment, including the roads and water sources along the Guvrin, Shiqma and Gerar Streams (Finkelstein 1996:232; Morris 2005:387–390; Blakely 2018:287–290).

In addition to the geographical proximity of the Gal'on Fortress and Canaanite Lakhish, the close association between these two sites and their association with Egyptian control of the region, is also manifests itself in the fate of the building that was abandoned in the second half of the twelfth century BCE, possibly due to the Egyptian withdrawal from Canaan, dated around 1130 BCE (as appears also in ^{14}C dates: Webster et al. 2017; Garfinkel et al. 2019). This withdrawal was accompanied by the destruction of Canaanite cities that enjoyed Egyptian protection, especially Lakhish and 'Azeqa. Based on the meager published data from nearby Tel Zayit, it is possible that it too was destroyed at this time (Tappy 2008:2082).[7] It seems reasonable to posit that these destructions were caused by the expansion of the Philistines beyond the borders of their initial territory, following the Egyptian withdrawal.

In conclusion, the Ga'lon Fortress sheds new light on other previously unearthed buildings, and provides a rare expression of the geopolitical changes in the region during the twelfth century BCE, as they are reflected in the rural periphery and the borderlines outside the better known tell-sites.

---

[6] This understanding is based on the suggestion that the Philistines arrived in Canaan during the first half of the twelfth century BCE. Other scholars have proposed that the Philistines arrived toward the end of that century, after the Egyptian withdrawal from Canaan (Ussishkin 1983:170; 1985:222–223; 2007; Finkelstein 1995; 1998; 2000).

[7] From the data published so far from the excavations of nearby Tel Burna (Shai, McKinny and Uziel 2015; McKinny, Tavger and Shai 2019; Shai 2021), it appears that the site underwent a crisis at the end of the thirteenth century BCE, as seen by the abandonment of the cultic precinct on the lower mound (Area B1). However, it is still unknown whether the mound's summit continued to be occupied later in the twelfth century BCE.

Appendix 1. List of Loci

Locus	Room	Description	Top elevation	Bottom elevation
100		Topsoil	197.66	196.9
101		Topsoil	197.45	196.7
102	B	Fill	197.13	196.61
103	C	Debris	196.92	196.67
111	A	Doorjamb	196.79	196.37
112	A	Doorjamb	197.22	196.57
113		Topsoil	197.22	196.8
114		Topsoil	196.92	196.62
115		Topsoil	196.62	196.38
116		Topsoil	196.62	196.5
117		Topsoil	196.24	196.02
118	G	Debris	196.7	196.34
119	F/G	Partition wall	196.78	196.44
121	B	Bonfire ash	196.85	196.61
122	A	Debris	196.8	196.54
126	F	Debris	196.6	196.5
127	D/E	Debris	196.6	196.31
128	A, M	Topsoil	197.06	196.4
129	A	Debris	196.16	196.12
130	A	Debris	196.13	196.04
131	A	Oven	196.13	196.01#
132	A	Debris	196.38	196.16
133	A, D/E	Doorjamb	197.12	196.32
134	A, D/E	Doorjamb	197.06	196.31
137	F	Debris	196.6	196.34#
138	E	Debris	196.29	196.14#
139	M	Debris	196.46	196.4
140	M	Debris	196.4	195.88#
141	A	Collapse?	196.24	195.95
142	A	Threshold	196.84–196.75	196.54
143	A, D/E	Collapse	196.45	196.23
146		Topsoil	196.6	196.53
147	H	Debris	196.53	196.29#
148	I	Debris	196.53	196.27#
149	J/K	Partition wall	196.21	195.54
151	D/E	Debris	196.4	196.2
152	L	Debris/fill	196.09	195.51
153	K	Topsoil	196.01	195.65
154	E	Debris	196.26	196.11#
155	J	Debris	196.03	195.82#
156	K	Debris	195.65	195.35#
157	J	Debris/fill	195.89	195.65
158	D	Debris/fill	196.2	195.93#
159	E	Debris on pavement	196.24	195.91#
162	J	Debris	196.2	195.92#
165	E	Debris	196.42	196.11#
166	D/E	Pillar base	196.36	196.05
167	D	Debris	196.2	196.09#
168	A	Debris	196.54	196.3
169	A	Dismantling collapse 141	196.24	195.95
170	A	Debris	195.95	195.86#
171	A	Stone slab	195.98	195.92
172	D/E	Pillar base	196.55	195.99
173	D/E	Pillar base	196.36	196.17
174	D/E	Pillar base	196.52	196.11
175	A	Stone slab	195.98	195.92

Appendix 2. List of Walls

Wall No.	Top Elevation	Bottom Elevation[i]
104	197.45	196.61*
105	197.45	196.31 on bedrock
106	196.89	195.45*
107	196.24	195.49*
108	196.62	196.15*
109	197.19	196.61*
110	197.00	196.51*
120	196.80	196.57*
125	196.60	196.18*
135	196.55	195.96*
136	196.46	195.71 on bedrock
144	196.87	196.38*
145	196.91	196.30*
150	196.53	195.38*
164	196.16	195.56*

[i] Base of wall not reached

REFERENCES

Aharoni Y. 1975. *Lachish* V: *Investigations at Lachish; The Sanctuary and the Residency* (Tel Aviv University Institute of Archaeology Publications 4). Tel Aviv.

Amiran R. 1969. *Ancient Pottery in the Holy Land, from Its Beginnings in the Neolithic Period to the End of the Iron Age*. Jerusalem–Ramat Gan.

Amiran R. 1970. Tel Hesi. In B. Mazar ed. *EAEHL* 2. Pp. 584–586 (Hebrew).

Aston D.A. 2004. Amphorae in New Kingdom Egypt. *Egypt and the Levant* 14:175–213.

Barako T.J. 2007. *Tel Mor: The Moshe Dothan Excavations, 1959–1960 (*IAA Reports 32). Jerusalem.

Ben-Shlomo D. 2003. The Iron Age Sequence of Tel Ashdod: A Rejoinder to 'Ashdod Revisited' by I. Finkelstein and L. Singer-Avitz. *Tel Aviv* 30:83–107.

Blakely J.A. 2018. Tell el-Hesi: A Type Site for Reevaluating So-Called 'Egyptian Governors' Residencies' of the South. *PEQ* 150:271–295.

Bliss F.J. 1898. *A Mound of Many Cities: Tell el Hesy Excavated* (2nd ed.). London.

Brandl B. 2010. The Stratigraphy of the Settlement. In T. Dothan and B. Brandl. *Deir el-Balaḥ. Excavations in 1977–1982 in the Cemetery and Settlement* 1: *Stratigraphy and Architecture* (Qedem 49). Jerusalem. Pp. 63–250.

Bunimovitz S. 1988. an Egyptian "Governor's Residency" at Gezer? Another Suggestion. *Tel Aviv* 15:68–76.

Bunimovitz S. and Lederman Z. 2014. Migration, Hybridization, and Resistance: Identity Dynamics in the Early Iron Age Southern Levant. In A.B. Knapp and P. van Dommelen eds. *The Cambridge Prehistory of the Bronze and Iron Age Mediterranean*. Cambridge. Pp. 252–265.

Clamer C. 2004a. The Pottery and Artefacts from the Level VI Temple in Area P. In D. Ussishkin. *The Renewed Archaeological Excavations at Lakhish (1973–1994)* III (Tel Aviv University Institute of Archaeology Monograph Series 22). Tel Aviv. Pp. 1288–1368.

Clamer C. 2004b. The Pottery from the Levels P-2 and P-1 in Area P. In D. Ussishkin. *The Renewed Archaeological Excavations at Lakhish (1973–1994)* III (Tel Aviv University Institute of Archaeology Monograph Series 22). Tel Aviv. Pp. 1155–1234.

Dever W.G. 1986. *Gezer* IV: *The 1969–71 Seasons in Fields VI, the "Acropolis"* (ANGSBA IV) (2 vols.). Jerusalem.

Dever W.G., Lance H.D., Bullard R.G., Cole D.P. and Seger J.D. 1974. *Gezer* II: *Report of the 1967–70 Seasons in Fields I and II* (ANGSBA II). Jerusalem.

Dever W.G., Lance H.D. and Wright G.E. 1970. *Gezer* I: *Preliminary Report of the 1964–1966 Seasons* (ANGSBA I). Jerusalem.

Dorsey D. 1991. *The Roads and Highways of Ancient Israel*. Baltimore–London.

Dothan M. 1971. *Ashdod* II–III: *The Second and Third Seasons of Excavations, 1963, 1965; Soundings in 1967* (*'Atiqot* [*ES*] 9–10). Jerusalem.

Dothan M. and Ben-Shlomo D. 2005. *Ashdod* VI: *The Excavations of Areas H and K (1968–1969)* (IAA Reports 24). Jerusalem.

Dothan M. and Porath Y. 1993. *Ashdod* V: *Excavation of Area G; The Fourth–Sixth Seasons of Excavations 1968–1970* (*'Atiqot* 23). Jerusalem.

Dothan T. 1979. *Excavations at the Cemetery of Deir el-Balaḥ*. (Qedem 10). Jerusalem.

Dothan T. 1987. The Impact of Egypt on Canaan during the 18th and 19th Dynasties in the Light of the Excavations at Deir el-Balaḥ. In A.F. Rainey ed. *Egypt, Israel, Sinai: Archaeology and Historical Relationships in the Biblical Period*. Tel Aviv. Pp. 121–135.

Dothan T. and Brandl B. 2010. *Deir el Balaḥ: Excavations in 1977–1982 in the Cemetery and Settlement* II: *The Finds* (Qedem 50). Jerusalem.

Dothan T., Gitin S. and Zukerman A. 2006. The Pottery: Canaanite and Philistine Traditions and Cypriote and Aegean Imports. In M.W Meehl., T. Dothan and S. Gitin. *Tel Miqne-Ekron Excavations 1995–1996: Field INE East Slope–Iron Age I (Early Philistine Period)* (Tel Miqne-Ekron Final Field Report Series 8). Jerusalem. Pp. 71–176.

Dothan T. and Zukerman A. 2004. A Preliminary Study of the Mycenaean IIIC:1 Pottery Assemblages from Tel Miqne-Ekron and Ashdod. *BASOR* 333:1–54.

Finkelstein I. 1986. *'Izbet Ṣarṭah: An Early Iron Age Site near Rosh Ha'ayin, Israel* (BAR Int. S. 299). Oxford.

Finkelstein I. 1995. The Date of the Settlement of the Philistines in Canaan. *Tel Aviv* 22:213–239.

Finkelstein I. 1996. The Territorial-Political System of Canaan in the Late Bronze Age. *Ugarit-Forschungen* 28:221–255.

Finkelstein I. 1998. Philistine Chronology: High, Middle or Low? In S. Gitin., A. Mazar. and E. Stern eds. *Mediterranean Peoples in Transition: Thirteenth to Early Tenth Centuries BCE*. Jerusalem. Pp. 140–147.

Finkelstein I. 2000. The Philistine Settlements: When, Where and How Many? In E.D Oren ed. *The Sea Peoples and Their World: A Reassessment* (University Museum Monograph 108; University Museum Symposium Series 11). Philadelphia. Pp. 159–180.

Furumark A. 1941. *Mycenaean Pottery: Analysis and Classification*. Stockholm.

Gadot Y. 2009. Late Bronze Age (Strata X14–X12). In Y. Gadot and E. Yadin eds. *Apheq-Antipatris* II: *The Remains on the Acropolis; The Moshe Kochavi and Pirhiya Beck Excavations* (Tel Aviv University Institute of Archaeology Monograph Series 27). Tel Aviv. Pp. 41–71.

Gadot Y. 2010. The Late Bronze Egyptian Estate at Apheq. *Tel Aviv* 37:48–66.

Gadot Y., Kleiman S. and Lipschitz O. 2018. A Tale of Two Cities: Tel Azekah and Tell es-Safi/Gath during the Late Bronze Age. In I. Shai., J.R. Chadwick, L. Hitchcock, A. Dagan, C. McKinny and J. Uziel eds. *Tell It in Gath: Studies in the History and Archaeology of Israel; Essays in Honor of Aren M. Maeir on the Occasion of His Sixtieth Birthday* (Ägypten und Altes Testament 90) Münster. Pp. 206–221.

Gadot Y. Yasur-Landau A. and Uziel J. 2012. The Late Bronze Age Pottery. In A.M. Maeir ed. *Tell es-Safi/Gath* I: *The 1996–2005 Seasons* (Ägypten und Altes Testament 69). Wiesbaden. Pp. 241–264.

Ganor S. and Weissbein I. 2020. Rujum el-Masha'ala (Gal'on Fortress). *HA–ESI* 132 (November 10). http://www.hadashot-esi.org.il/Report_Detail_Eng.aspx?id=25838 (accessed December 7, 2022).

Ganor S. and Weissbein I. 2022. The Isolated Structure of Gal'on Fortress, and the "Egyptian Governors' Residencies" and "Fortresses" in Southwestern Canaan. In A. Golani, D. Varga, Y. Tchekhanovets and M. Birkenfeld eds. *Archaeological Excavations and Research Studies in Southern Israel: Collected Papers* 5 (*18th Annual Southern Conference)*. Jerusalem. Pp. 117*–137*.

Garfinkel Y., Hasel M.G., Klingbeil M.G., Kang H.-G., Choi G., Chang S.-Y., Hong S., Ganor S., Kreimerman I. and Bronk Ramsey C. 2019. Lachish Fortifications and State Formation in the Biblical Kingdom of Judah in Light of Radiometric Datings. *Radiocarbon* 61:695–712.

Garfinkel Y., Hasel M.G., Klingbeil M.G., Kreimerman I., Pytlik M., Carroll J.W., Waybright J.W.B., Kang H.-G, Choi G., Chang S.-Y., Hong S., David A., Weissbein I. and Silberberg N. 2021. The Canaanite and Judean Cities of Lachish, Israel: Preliminary Report of the Fourth Expedition, 2013–2017. *AJA* 125/3:419–459.

Gitin S. 1993. Scoops: Corpus, Function and Typology. In M. Heltzer, A. Segal and D. Kaufman eds. *Studies in the Archaeology and History of Ancient Israel in Honour of Moshe Dothan*. Haifa. Pp. 99*–126*.

Goldwasser O. 1984. Hieratic Inscriptions from Tel Sera' in Southern Canaan. *Tel Aviv* 11:77–93.

Grant E. and Wright G.E. 1938. *Ain Shems Excavations (Palestine)* IV: *Pottery* (Biblical and Kindred Studies 7). Haverford, Pa.

Greenberg R. 1987. New Light on the Early Iron Age at Tell Beit Mirsim. *BASOR* 265:55–80.

Hasel M.G. 1998. *Domination and Resistance: Egyptian Military Activity in the Southern Levant, ca. 1300–1185 B.C*. (Probleme der Ägyptologie 11). Leiden–Boston–Cologne.

Herzog Z. 1997. *Archaeology of the City: Urban Planning in Ancient Israel and Its Social Implications* (Tel Aviv University Institute of Archaeology Monograph Series 13). Tel Aviv.

Herzog Z. and Tzuk T. 1995. Tel Gerisa 1991–1992. *HA* 103:53–55 (Hebrew).

Higginbotham C.R. 2000. *Egyptianization and Elite Emulation in Ramesside Palestine: Governance and Accommodation on the Imperial Periphery* (Culture and History of the Ancient Near East 2). Leiden–Boston–Cologne.

James F.W. and McGovern P.E. 1993. *The Late Bronze Egyptian Garrison at Beth Shan: A Study of Levels VII and VIII* (2 vols.). Philadelphia.

Jasmin M. 2006. The Political Organization of the City-States in Southwestern Palestine in the Late Bronze Age IIB (13th Century BC). In A.M. Maeir and P. de Miroschedji eds. "*I will Speak the Riddles of Ancient Times": Archaeological and Historical Studies in Honor of Amihai Mazar on the Occasion of His Sixtieth Birthday* 2. Winona Lake. Pp. 161–191.

Killebrew A.E., Goldberg P. and Rosen A.M. 2006. Deir el-Balah: A Geological, Archaeological, and Historical Reassessment of an Egyptianizing 13th and 12th Century B.C.E. Center. *BASOR* 343:97–119.

Kleiman S., Gadot Y. and Lipschits O. 2016. A Snapshot of the Destruction Layer of *Tell Zakarīye*/ Azekah Seen against the Backdrop of the Final Days of the Late Bronze Age. *ZDPV* 132:105–133.

Kreimerman I. and Garfinkel Y. 2018. The Cup-and-Saucer Vessels. In Y. Garfinkel, S. Ganor. and M.G. Hasel. *Khirbet Qeiyafa* 4*: Excavation Report 2007–2013: Art, Cult and Epigraphy*. Jerusalem. Pp. 187–202.

Lehmann G., Rosen S.A., Berlejung A., Neumeier B.-A. and Niemann H.M. 2010. Excavations at Qubur al-Walaydah 2007–2009. *Die Welt des Orients* 40:137–159.

Leonard A. 1994. *An Index to the Late Bronze Age Aegean Pottery from Syria-Palestine*. (Studies in Mediterranean Archaeology CXIV). Jonsered.

Loud G. 1948. *Megiddo* II: *Seasons of 1935–39* (OIP LXII) (2 vols.). Chicago.

Maeir A.M. 2012a. History of Research: 1838 to 1996. In A.M. Maeir ed. *Tell es-Safi/Gath* I*: The 1996–2005 Seasons* (Ägypten und Altes Testament 69). Wiesbaden. Pp. 89–107.

Maeir A.M. 2012b. The Tell es-Safi/Gath Archaeological Project 1996–2010: Introduction, Overview and Synopsis of Results. In A.M. Maeir ed. *Tell Es-Safi/Gath* I*: The 1996–2005 Seasons* (Ägypten und Altes Testament 69). Wiesbaden. Pp. 3–52.

Maeir A.M. 2020. Introduction and Overview. In A.M. Maeir. and J. Uziel eds. *Tell es-Safi/Gath* II: *Excavations and Studies* (Ägypten und Altes Testament 105). Münster. Pp. 1–88.

Maeir A.M., Chadwick J.R., Dagan A., Hitchcock L.A., Katz J., Shai I. and Uziel J. 2019. The Late Bronze Age at Tell es-Safi/Gath and the Site's Role in Southwestern Canaan. In A.M. Maeir, I. Shai and C. McKinny eds. *The Late Bronze and Early Iron Ages of Southern Canaan* (Archaeology of the Biblical Worlds 2). Berlin–Boston. Pp. 1–18.

Magrill P. and Middleton A. 2004. Studies in Pottery, Petrography, Geology, Environment and Technology. In D. Ussishkin. *The Renewed Archaeological Excavations at Lakhish (1973–1994)* V. (Tel Aviv University Institute of Archaeology Monograph Series 22). Tel Aviv. Pp. 2514–2549.

Manclossi F. and Rosen S.A. 2019. Dynamics of Change in Flint Sickles of the Age of Metals: New Insights from a Technological Approach. *JEMAHS* 7:6–22.

Martin M.A.S. 2009. The Egyptian Assemblage. In N. Panitz-Cohen and A. Mazar eds. *Excavations at Tel Beth-Shean 1989–1996* III: *The 13th–11th Century BCE Strata in Areas N and S*. Jerusalem. Pp. 434–477.

Martin M.A.S. 2011. *Egyptian-Type Pottery in the Late Bronze Age Southern Levant* (Contributions to the Chronology of the Eastern Mediterranean 29; Denkschriften der Gesamtakademie 69). Vienna.

Martin M.A.S. and Barako T.J. 2007. Egyptian and Egyptianized Pottery. In T.J Barako. *Tel Mor: The Moshe Dothan Excavations, 1959–1960 (*IAA Reports 32). Jerusalem. Pp. 129–165.

Master D.M., Walton J.T. and Yasur-Landau A. 2020. Early Philistine Coastal Pottery. In L.E. Stager, D.M. Master and A.J. Aja eds. *Ashkelon* 7: *The Iron Age I*. University Park. Pp. 185–248.

Mazar A. 1985a. The Emergence of the Philistine Material Culture. *IEJ* 35:95–107.

Mazar A. 1985b. *Excavations at Tell Qasile* II: *The Philistine Sanctuary; Various Finds, the Pottery, Conclusions, Appendixes* (Qedem 20). Jerusalem.

Mazar A. 1997. *Timnah (Tel Batash)* I: *Stratigraphy and Architecture* (Qedem 37) (2 vols.). Jerusalem.

Mazar A. 2006. Area Q: Stratigraphy and Architecture. In A. Mazar. *Excavations at Tel Beth-Shean 1989–1996* I: *From the Late Bronze Age IIB to the Medieval Period* (The Beth-Shean Valley Archaeological Project 1). Jerusalem. Pp. 61–119.

Mazar A. 2015. Iron Age I: Northern Coastal Plain, Galilee, Samaria, Jezreel Valley, Judah, and Negev. In S. Gitin ed. *The Ancient Pottery of Israel and Its Neighbors from the Iron Age through the Hellenistic Period* 1. Jerusalem. Pp. 5–70.

Mazar A. and Panitz-Cohen, N. 2001. *Timnah (Tel Batash)* II: *The Finds from the First Millennium BCE* (Qedem 42) (2 vols.). Jerusalem.

McKinny C., Tavger A. and Shai I. 2019. Tel Burna in the Late Bronze: Assessing the 13th Century BCE Landscape of the Shephelah. In A.M. Maeir, I. Shai and C. McKinny eds. *The Late Bronze and Early Iron Ages of Southern Canaan* (Archaeology of the Biblical Worlds 2). Berlin–Boston. Pp. 148–170.

Morris E.F. 2005. *The Architecture of Imperialism: Military Bases and the Evolution of Foreign Policy in Egypt's New Kingdom* (Probleme der Ägyptologie 22). Leiden–Boston.

Müller V. 2006. Die Entwicklung der Gefässform 'Cup-and-Saucer' in Ägypten und Syrien-Palästina. In E. Czerny, I. Hein, H. Hunger, D. Melman and A. Schwab eds. *Timelines: Studies in Honour of Manfred Bietak* II (Orientalia Lovaniensa Analecta 149). Leuven–Paris–Dudley, Mass. Pp. 259–277.

Na'aman N. 1988. The Southern Shefelah during the Late Bronze Age according to Cuneiform Documents. In E. Stern. and D. Urman eds. *Man and Environment in the Southern Shefelah: Studies in Regional Geography and History*. Giv'atayim. Pp. 93–98 (Hebrew).

Oren E.D. 1973. *The Northern Cemetery of Beth Shan*. Leiden.

Oren E.D. 1984. 'Governors' Residencies' in Canaan under the New Kingdom: A Case Study of Egyptian Administration. *Journal of the Society for the Study of Egyptian Antiquities* 14:37–56.

Oren E.D. 2019. Middle Bronze Age II–Late Bronze Age II Egyptian and Egyptian-Type Pottery. In S. Gitin ed. *The Ancient Pottery of Israel and Its Neighbors: From the Middle Bronze Age through the Late Bronze Age* 3. Jerusalem. Pp. 259–338.

Oren E.D. and Shershevski J. 1989. Military Architecture along the 'Ways of Horus': Egyptian Reliefs and Archaeological Evidence. *Eretz-Israel* 20:8–22 (Hebrew; English summary, p. 193*).

Panitz-Cohen N. 2006. The Pottery of Strata XII–V at Tel Batash. In N. Panitz-Cohen and A. Mazar eds. *Timnah (Tel Batash)* III: *The Finds from the Second Millenium BCE* (Qedem 45). Jerusalem. Pp. 9–150.

Panitz-Cohen N. 2009. The Local Canaanite Pottery. In N. Panitz-Cohen and A. Mazar eds. *Excavations at Tel Beth-Shean 1989–1996* III: *The 13th–11th Century BCE Strata in Areas N and S* (The Beth-Shean Valley Archaeological Project 3). Jerusalem. Pp. 195–433.

Panitz-Cohen N. 2015. The 'Plain' Pottery: Typological and Technological Aspects. In R. Kletter., I. Ziffer and W. Zwickel. *Yavneh* II: *The 'Temple Hill' Repository Pit* (OBO.SA 36). Fribourg–Göttingen. Pp. 97–137.

Pritchard J.B. 1980. *The Cemetery at Tell es-Sa'idiyeh, Jordan*. Philadelphia.

Shai I. 2021. Tel Burna. *HA–ESI* 133 (June 15). https://www.hadashot-esi.org.il/Report_Detail_Eng.aspx?id=25985&mag_id=133 (accessed December 12, 2022).

Shai I., Maeir A.M., Gadot Y. and Uziel J. 2011. Differentiating between Public and Residential Buildings: A Case Study from Late Bronze Age II Tell eṣ-Ṣafi/Gath. In A. Yasur-Landau., J.R. Ebeling and L.B. Mazow eds. *Household Archaeology in Ancient Israel and Beyond* (Culture and History of the Ancient Near East 50). Leiden–Boston. Pp. 107–131.

Shai I., McKinny C. and Uziel J. 2015. Late Bronze Age Cultic Activity in Ancient Canaan: A View from Tel Burna. *BASOR* 374: 115–133.

Singer I. 1986. An Egyptian 'Governor's Residency' at Gezer? *Tel Aviv* 13:26–31.

Stager L.E. 1995. The Impact of the Sea Peoples (1185–1050 BC). In T.E. Levy ed. *The Archaeology of Society in the Holy Land*. London–Washington. Pp. 332–348.

Stager L.E., Schloen J.D., Master D.M, Press M.D. and Aja A. 2008. Stratigraphic Overview. In L.E. Stager., J.D. Schloen and D.M Master eds. *Ashkelon* 1: *Introduction and Overview (1985–2006)*. Winona Lake. Pp. 213–323.

Starkey J.L. and Harding L. 1932. *Beth-Pelet* II: *Beth-Pelet Cemetery* (BSAE LII). London.

Stockhammer P.W. 2019. Shifting Meanings and Values of Aegean-Type Pottery in the Late Bronze Age Southern Levant. In A.M Maeir., I. Shai. and C. McKinny eds. *The Late Bronze and Early Iron Ages of Southern Canaan*. (Archaeology of the Biblical Worlds 2). Berlin–Boston. Pp. 233–246.

Tappy R.E. 2008. Zayit, Tel. *NEAHL* 5. Pp. 2082–2083.

Tufnell O. 1958. *Lachish (Tell ed-Duweir)* IV: *The Bronze Age* (The Wellcome-Marston Archaeological Research Expedition to the Near East Publications IV) (2 vols.). London–New York–Toronto.

Tufnell O., Inge C.H. and Harding L. 1940. *Lachish (Tell ed Duweir)* II: *The Fosse Temple* (The Wellcome Archaeological Research Expedition to the Near East Publications II). London–New York–Toronto.

Ussishkin D. 1983. Excavations at Tel Lachish 1978–1983: Second Preliminary Report. *Tel Aviv* 10:97–175.

Ussishkin D. 1985. Level VII and VI at Tel Lachish and the End of the Late Bronze Age in Canaan. In J.N. Tubb ed. *Palestine in the Bronze and Iron Ages: Papers in Honour of Olga Tufnell*. London. Pp. 213–230.

Ussishkin D. 2004a. The Level VI Pottery from Areas D and GE. In D. Ussishkin. *The Renewed Archaeological Excavations at Lachish (1973–1994)* III (Tel Aviv University Institute of Archaeology Monograph Series 22). Tel Aviv. Pp. 1235–1242.

Ussishkin D. 2004b. A Synopsis of the Stratigraphical, Chronological and Historical Issues. In D. Ussishkin. *The Renewed Archaeological Excavations at Lachish (1973–1994)* I (Tel Aviv University Institute of Archaeology Monograph Series 22). Tel Aviv. Pp. 50–119.

Ussishkin D. 2007. Lachish and the Date of the Philistine Settlement in Canaan. In M. Bietak and E. Czerny eds. *The Synchronisation of Civilisations in the Eastern Mediterranean in the Second Millennium B.C.* III *(Proceedings of the SCIEM 2000—2nd EuroConference Vienna, 28th May–1st June 2003* (Österreichische Akademie der Wissenschaften, Denkschriften der Gesamtakademie XXXVII). Vienna. Pp. 601–607.

Uziel J. and Gadot Y. 2010. The 'Cup-and-Saucer' Vessel: Function, Chronology, Distribution and Symbolism. *IEJ* 60:41–57.

Vincent L.-H. 1907. *Canaan d'après l'exploration récente*. Paris.

Webster L.C., Sergi O., Kleiman S., Lipschits O., Hua Q., Jacobsen G.E., Tristant Y. and Gadot Y. 2017. Preliminary Radiocarbon Results for Late Bronze Age Strata at Tel Azekah and Their Implications. *Radiocarbon* 60:309–331.

Weissbein I., Garfinkel Y., Hasel M.G., Klingbeil M.G., Brandl B. and Misgav H. 2019.The Level VI North-East Temple at Tel Lachish. *Levant* 51:76–104.

Wodzińska A. 2010. *A Manual of Egyptian Pottery* 3: *Second Intermediate Period–Late Period* (Ancient Egypt Research Associates Field Manual Series 1). Boston.

Yadin Y. 1963. *The Art of Warfare in Biblical Lands in Light of Archaeological Discovery*. Jerusalem.

Yannai E. 2000. A Re-evaluation of the Late Bronze Pottery from Tel Ṣippor. *IEJ* 50:203–215.

Yannai E. 2004. The Late Bronze Age Pottery from Area S. In D. Ussishkin. *The Renewed Archaeological Excavations at Lachish (1973–1994)* III (Tel Aviv University Institute of Archaeology Monograph Series 22). Tel Aviv. Pp. 1032–1146.

Zuckerman S. 2007. Late Bronze Age Scoops: Context and Function. In S.W. Crawford ed. *"Up to the Gates of Ekron": Essays on the Archaeology and History of the Eastern Mediterranean in Honor of Seymour Gitin*. Jerusalem. Pp. 313–330.

Zukerman A. 2012. Iron Age I and Early Iron Age IIA Pottery. In A.M. Maeir ed. *Tell es-Safi/Gath* I*: The 1996–2005 Seasons* (Ägypten und Altes Testament 69). Wiesbaden. Pp. 265–311.

Zukerman A. 2014. Baking Trays in the Second Millennium BCE Levant and Egypt: Form, Function and Cultural Significance. *Syria* 91:99–125.