'Atiqot 112, 2023

The Byzantine Pottery from Building 900 in the Southern Tyropoeon Valley

Débora Sandhaus[1]

The Byzantine pottery found in Building 900 was retrieved from two Byzantine-period occupation phases. Most of the pottery forms are of well-known types, characteristic of the Byzantine period in Jerusalem, both locally made and imported. The vessel types are domestic in nature, including utility vessels for cooking and serving, and tableware. Based on the pottery finds, the building seems to have been constructed in the sixth century CE, most likely during its latter half, and served for a short period of time.

Keywords: City of David, Byzantine period, pottery typology, utility vessels, tableware

Introduction

The Byzantine-period pottery found in Building 900 originated from two main chronological phases (IIa and IIb; see Szanton and Uziel, this volume).[2] The pottery is presented in chronological order, from early (Phase IIb) to late (Phase IIa), and according to contexts from each phase. Material was selected for analysis from contexts of secure stratigraphic attribution, including floors and their makeup, wall foundation trenches and sealed fills. In accordance with standard practice in archaeological excavations, the material retrieved from above floors, and that which was collected in association with the floors, was carefully separated into different baskets; these distinctions are taken into consideration in determining the time the floors were laid down compared to the period when the structure was in use.

Most of the pottery forms are of well-known types, characteristic of the Byzantine period in Jerusalem. The heterogeneous repertoire of forms includes utility vessels used for cooking and serving, and tableware. Most of the vessels are of local manufacture, while a substantial quantity of imported Late Roman Red Slip bowls is also present.

The references to parallels of locally produced vessels are mostly limited to excavations conducted in the Jerusalem area, including Magness' (1993) comprehensive pottery

[1] Dr. Debora Sandhaus, Israel Antiquities Authority.

[2] Thanks are due to Carmen Hersch of the IAA for the pottery drawings for this report.

corpus and recent excavation reports, mainly those of the Jewish Quarter (Magness 2006; 2012), the Giv'ati Parking Lot (Balouka 2013) and the Temple Mount (Mazar and Gordon 2007; Peleg and Adler 2007). Publications consulted for imported ware include Hayes' (1972; 1980) corpora of Late Roman Red Slip Pottery, the comprehensive study of Gaza amphorae by Majcherek (1995), the publications of the finds from Caesarea (Riley 1975; Adan-Bayewitz 1986; Bar-Nathan and Adato 1986; Blakely 1987; Magness 1992) and the author's publication of the finds from Nysa-Scythopolis (Sandhaus, forthcoming). The publication of the lamps from the Schloessinger Collection (Rosenthal and Sivan 1978) was also consulted. Parallels for the finds are provided in the figure tables, including summary information on the chronological span of the referenced examples.

The Finds

Phase IIb

Floor 208 and Fill 209 Below It (Fig. 1)

This assemblage includes bowls of diverse forms: rounded bowls/lids with slightly thickened rims (Fig. 1:1–4); rouletted bowls with molded rims (Fig. 1:5, 6); a rilled-rim basin (Fig. 1:7); and an undecorated arched-rim basin with angular walls (Fig. 1:8), distinguished from the decorated varieties of such vessels (see below, Fig. 3:5). All these forms are common finds in Byzantine-period sites in Jerusalem, initially described and defined in Magness' corpus (Magness 1993) and in the many subsequent publications.

The rounded bowls/lids are the dominant vessel form in L208 and L209, frequently occuring in contexts dated to the third and fourth centuries CE.

The chronology of the rouletted bowls and the rilled- and arched-rim basins types was once narrowly assigned to the Late Roman/early Byzantine period (Magness 1993); however, it has since been revised. The appearance of rouletted bowls of Magness' (1993:185–187) Bowl Form 1 was assigned to the latter half of the second century CE, disregarding its sporadic occurrences in early second-century CE contexts (Rosenthal-Heginbottom 2014:658). These bowls continue to appear in the sixth and early seventh centuries CE, although the early and late variants of this type differ in the rim shape (Magness 1993:185–191); the earlier examples have modeled rims, while the later examples have almond-shaped or thickened rims.

The two basin types were shown to date to as early as c. 200 CE (Magness 2005:105), possibly sometime after 125/130 CE (Rosenthal-Heginbottom 2014:658). The last date of appearance of rilled-rim basins is the mid-sixth century CE (Rosenthal-Heginbottom 2014:659), while arched-rim basins—corresponding to Magness' (1993:204–205) Basin Form 1—continued to be produced well into the seventh and possibly the early eighth centuries CE, becoming coarser in their morphology over time (Magness 1993:204–208).

Taken together with the absence of late forms of the rouletted bowls and the arched-rim basins among the material from Building 900, these observations suggest that Floor 208

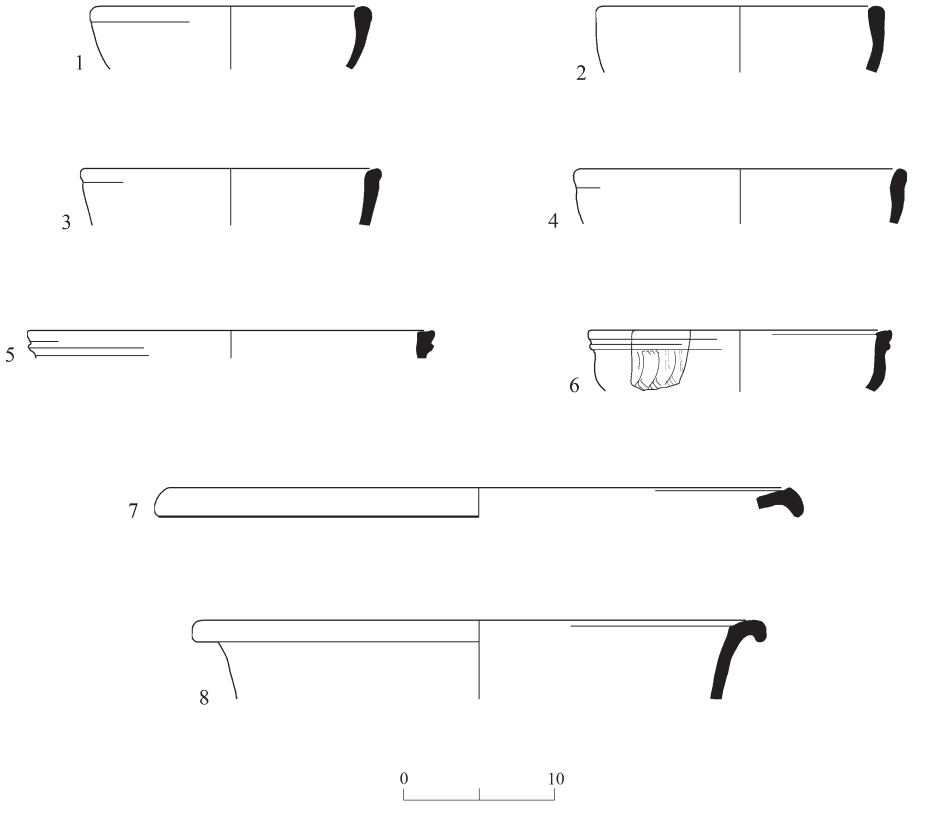

Fig. 1. Phase IIb pottery associated with the construction of Floor 208.

No.	Vessel	Locus	Basket	Description	Parallels and Date (CE)
1	Bowl/lid	209	2539/51	Light brown to orange ware; orange ext.; white grits	Jerusalem, beneath the Cardo, 3rd–4th c., context yielding pottery dated to the 5th–first half of the 6th c. (Magness 2012:282, 293, Pl. 9.5:5) Naḥal Refa'im, 3rd–4th c. (Magness 2006:186) Jerusalem, Temple Mount, 4th and possibly early 5th c. (Mazar and Gordon 2007: Fig. 15.7:1)
2	Bowl/lid	209	2546/51	Light brown ware; white grits	As No. 1
3	Bowl/lid	209	2541/53	Light brown ware; white grits	As No. 1
4	Bowl/lid	209	2539/52	Orange ware; white grits	As No. 1
5	Rouletted-rim bowl Form 1	209	2539/53	Light brown to orange ware; gray core; red slip	Jerusalem, fills related to the construction of the legionary bakery, mid-2nd c. (Rosenthal-Heginbottom 2011:210–213, 221–222) Jerusalem, fills beneath the Cardo, 5th–first half of 6th c. (Magness 2012:282–283, 285, Pl. 9.3:10–12) Jerusalem, Giv'ati Parking Lot, Strata VI–V, 4th–early 7th c. (Balouka 2013:152) Jerusalem, Temple Mount, 4th and possibly early 5th c. (Mazar and Gordon 2007:149–150, 154, Figs. 15.1:2; 15.2:4–11; 15.3:6, 7)

◂ **Fig. 1**

No.	Vessel	Locus	Basket	Description	Parallels and Date (CE)
6	Bowl	209	2541	Light brown to orange ware; small white grits; gray core; dark red slip	As No. 5
7	Rilled-rim basin	209	2541/54	Orange ware	Jerusalem, fills beneath the Nea Church, 5th–first half of 6th c. (Magness 2012:282–283, 287, Pl. 9.1:16, 17) Jerusalem, Giv‘ati Parking Lot, Stratum VIB, 4th–5th c. (Balouka 2013:153) Jerusalem, Roman Dump, 70/75–120/125 CE (Rosenthal-Heginbottom 2014:657) Jerusalem, Temple Mount, 4th and possibly early 5th c. (Mazar and Gordon 2007:150, 154, Fig. 15.13:6, 7)
8	Arched-rim basin Form 1	208	2546	Light brown ware; red core, pink ext.; white grits	Jerusalem, fills beneath the Cardo, 5th–first half of the 6th c. (Magness 2012:282–283, 285, 291, Pl. 9.3:29, and see additional parallels therein) Jerusalem, Giv‘ati Parking Lot, Strata VI–V, 4th–early 7th c. (Balouka 2013:153) Temple Mount, 4th and possibly early 5th c. (Mazar and Gordon 2007:150–151, 154, Figs. 15.1:6; 15.4:2, 3)

was laid down sometime between the third and the early fifth centuries CE, within the Late Roman period.

The Matrix of Plaster Floor 120 (Fig. 2:1, 2)
Only two diagnostic sherds were uncovered from the makeup of this plaster floor: a small bowl (Fig. 2:1), probably of Roman-period date, and an undecorated arched-rim basin (Fig. 2:2) of the same type described above (see Fig. 1:8). These finds suggest that the plaster floor could not have been laid before the Late Roman period. Although a later date is also possible, the small quantity of pottery does not allow a more precise assertion.

Makeup of Floor 120 and Fill 123 Below It (Fig. 2:3–8)
The fill yielded a delicate, unribbed casserole lid (Fig. 2:5) and two storage-jar types, one with a thickened rim and ridges at the bottom of the neck (Fig. 2:6, 7), and another with what appears to be a collared rim (Fig. 2:8). This small assemblage may be dated between the third and fourth/early fifth centuries CE.

Foundation Trench of Pillar Abutting W4, Sealed by Floor 116 (Fig. 2:9–11)
Foundation Trench 125 yielded a Phocaean Red Slip Form 3F bowl (Fig. 2:9) and a cooking pot with a triangular rim, a wide neck and two elongated handles drawn from the rim to the

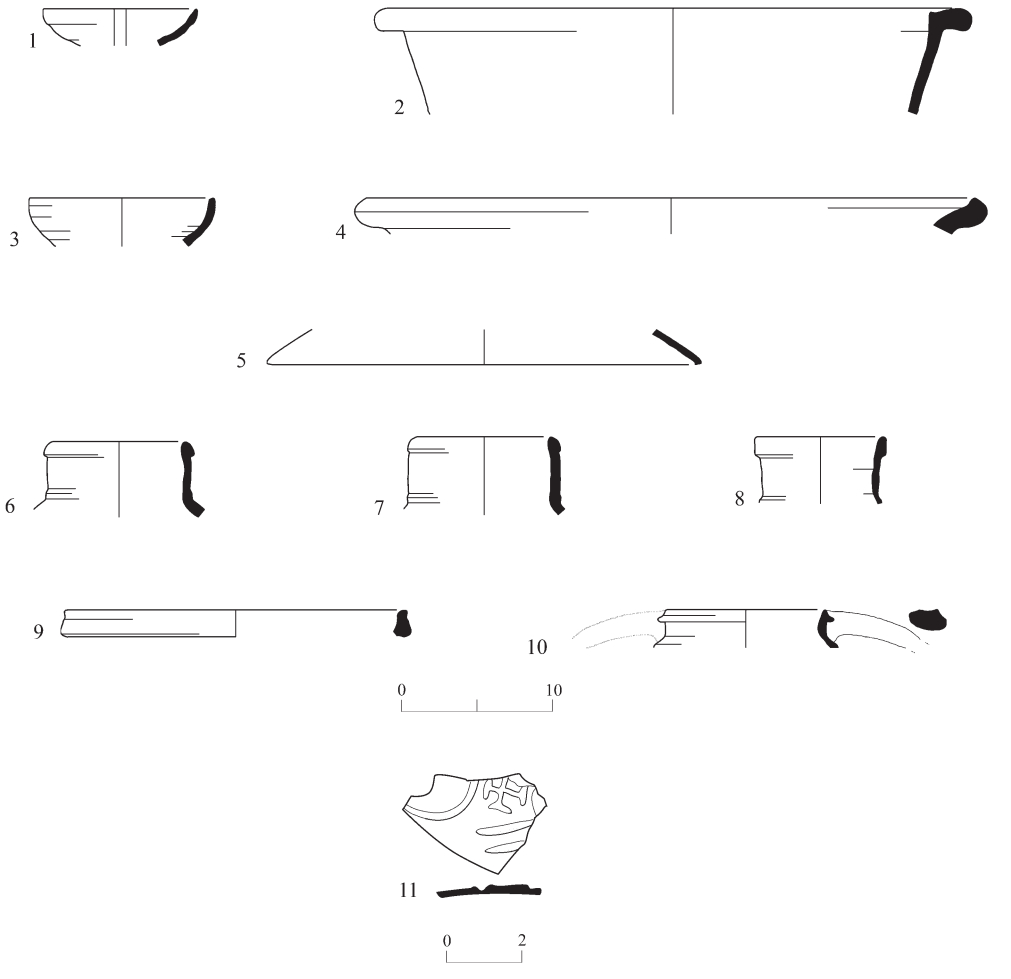

Fig. 2. Phase IIb pottery associated with Floor 120 (Nos. 1, 2), the makeup of Floor 120 and Fill 123 below it (Nos. 3–8) and the foundation trench (L125) of pillar abutting W4 (Nos. 10, 11).

No.	Vessel	Locus	Basket	Description	Parallels
1	Bowl	120	2334	Reddish-brown ware	
2	Arched-rim basin Form 1	120	2334/51	Pink ware	See Fig. 1:8
3	Fine Byzantine Ware(?) bowl Form 1B	123	2428/53	Light red ware; bands	Jerusalem, mid-6th–late 7th/early 8th c. (Magness 1993:193–195)
4	Rilled-rim basin	123	2428	Orange ware, same as the ware used in making Roman tiles	See Fig. 1:7
5	Casserole lid	123	2412	Red ware	Jerusalem, late 3rd/early 4th to 9th/10th c. (Magness 1993:215, No. 1)
6	Storage jar	123	2428/52	Red ware	Jerusalem, Temple Mount, 4th and possibly early 5th c. (Mazar and Gordon 2007: Fig. 15.13:17)
7	Storage jar	123	2472	Red ware	Same as Fig. 6:6

◂ **Fig. 2**

No.	Vessel	Locus	Basket	Description	Parallels
8	Storage jar/jug	123	2428/51	Gray ware; pink ext.	Jerusalem, Giv‘ati Parking Lot, 3rd– 4th c. (personal observation)
9	Phocaean Red Slip bowl Form 3F	125	2474	Well-levigated orange ware; red slip	Unknown site, 6th c. (Hayes 1972:329–338, Fig. 69:25; 1980:526)
10	Cooking pot Form 4A	125	2474/52	Dark red ware; white grits	Jerusalem, 5th/6th–late 7th/8th c. (Magness 1993:219–220)
11	Small candlestick lamp	125	2474	Pink ware	Jerusalem, Temple Mount, 4th–early 5th c. (Mazar and Gordon 2007: Fig. 15.10:18), identical in decoration ‘En Gedi, 5th–6th c. (Vincenz 2007:391, Fig. 1)

shoulder (Fig. 2:10). Also found was a sherd of a candlestick lamp decorated with a cross (Fig. 2:11). The pottery finds suggest that W4 was constructed not earlier than the sixth century CE.

Sealed Fills 126 and 127 (Fig. 3)

The ceramic assemblage from these sealed fills includes a mix of sherds from different periods, although most span the Roman and the late Byzantine periods. Representative examples of the Roman-period ceramics include basins dated to the first/second century CE (Fig. 3:3, 4), whose rim is intermediate in form between that of two basin types—the shelf-rim and the rilled-rim basins; a krater with a short shelf rim (Fig. 3:7), similar to cooking pots of the third–early fifth centuries CE (Mazar and Gordon 2007: Fig. 15.9:12, 13); and storage jars with a thickened rim and a ridge at the bottom of the neck (Fig. 3:10–12), characteristic of the first to fourth centuries CE.

Other sherds from the two fills comprise Rouletted Bowl Form 3A (Fig. 3:6) and Gaza Amphora Form 3 (Fig. 3:13), both dating to the sixth–early seventh centuries CE (Magness 1993:189–190; Majcherek 1995:168, Pls. 6:1–6). The most chronologically diagnostic sherds are those of Phocaean Red Slip Form 3F bowls (Fig. 3:1, 2), dated to the sixth century CE. This more precise date for Fills 126 and 127 is reinforced by the absence of common vessel forms from the late sixth–early seventh centuries CE, including late forms of rouletted bowls, a large variety of candlestick lamps and Fine Byzantine Ware bowls. The two fills may be cautiously assigned to the mid-sixth century CE.

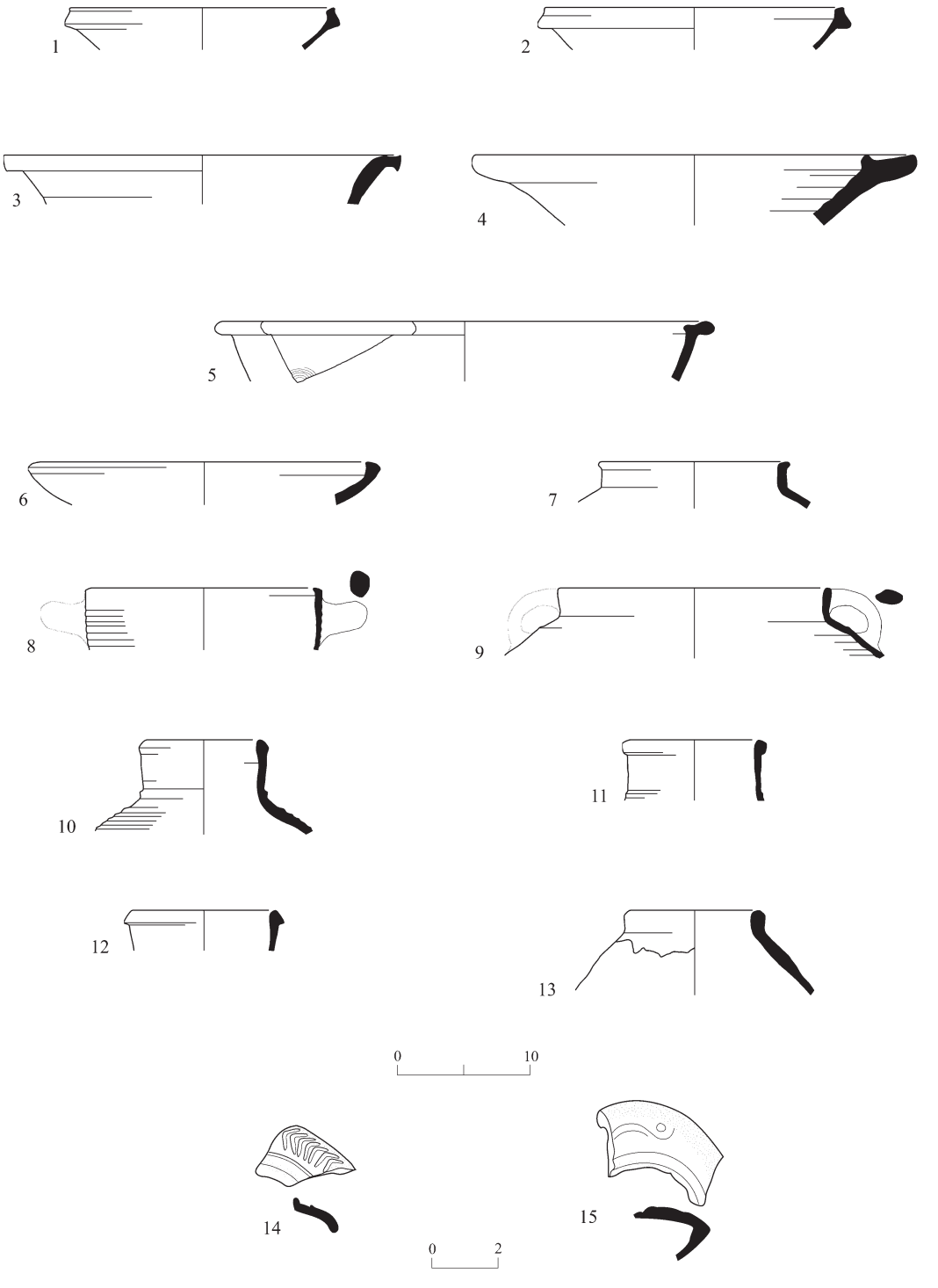

Fig. 3. Phase IIb pottery from Fills 126 and 127.

◂ **Fig. 3**

No.	Vessel	Locus	Basket	Description	Parallels
1	Phocaean Red Slip bowl Form 3F	127	2352/51	Reddish-orange ware; red slip; three ridges on the rim (not illustrated)	See Fig. 2:9
2	Phocaean Red Slip Bowl Form 3F	127	2352/55	Orange, well-levigated ware; red slip; a row of inclined lines stamped on the rim (not illustrated)	See Fig. 2:9
3	Bowl	126	2424/53	Light brown to orange ware; light gray core	Jerusalem, Roman Dump, type between the shelf-rim and the rilled-rim types, last quarter of 1st–first quarter of 2nd c. (Rosenthal-Heginbottom 2014:658, Fig. 2:3–4)
4	Bowl	127	2467/52	Light brown to orange ware; light gray core	Jerusalem, beneath the Nea Church, a similar form, 5th–first quarter of 6th c. (Magness 2012:282–283, Pl. 9.1:16) Jerusalem, Roman Dump, last quarter of the 1st–first quarter of 2nd c. (Rosenthal-Heginbottom 2014: Fig. 2:2)
5	Arched-rim basin Form 2A	127	2352/24	Gray core, red ware, orange ext. Wavy combed band on ext. (not illustrated)	Jerusalem, Giv‘ati Parking Lot, Strata VI–V, 4th–early 7th c. (Balouka 2013:153) Jerusalem, Temple Mount, 4th and possibly early 5th c. (Mazar and Gordon 2007:150–151, 154, Figs. 15.4:7; 15.6:15)
6	Rouletted bowl Form 3A	127	2376	Red ware; red dull matt slip	Jerusalem, 6th–early 7th c. (Magness 1993:189–190, No. 2) Jerusalem, Giv‘ati Parking Lot (personal observation)
7	Krater	127	2467/51	Light reddish-yellow ware; well-levigated	
8	Casserole Form 1	127	2352/52	Gritty red ware	Jerusalem, late 3rd/4th–8th c. (Magness 1993:211–213, Nos. 3, 4) Jerusalem, Area T-1, beneath the Nea Church, mid-6th c. (Magness 2012:282–284, Pl. 9.2:7) Jerusalem, drainage channels of the Cardo, went out of use in the late 7th–early 8th c. (Magness 2012:286, Pl. 9.4:18)
9	Cooking pot	127	2467/56	Gritty red ware	
10	Storage jar Form 3	126	2401	Light brownish-orange ware; light gray core; pink ext.	Jerusalem, 5th–6th c. (Magness 1993:222–223)
11	Storage jar	126	2450	Light orange to pink ware; white grits	As No. 10

◂ **Fig. 3** (cont.)

No.	Vessel	Locus	Basket	Description	Parallels
12	Storage jar	127	2467/53	Red ware; light gray core	As No. 10
13	Gaza amphora Form 3	127	2352	Light brown ware	Jerusalem, beneath the Nea Church, mid-6th c. (Magness 2012:284, Pl. 9.2:23) Jerusalem, Temple Mount, end of Byzantine period, 6th–early 7th c. (Peleg and Adler 2007:23, Fig. 2.2)
14	Beit-Naṭṭif oil lamp Form 1	126	2417	Light orange to pink ware; traces of dark red slip on nozzle	Jerusalem, 3rd–5th c. (Magness 1993:249–250)
15	Beit-Naṭṭif oil lamp Form 1	126	2478	Well-levigated orange ware; red slip	As No. 14

Floors 116A–C, Floor Makeup 119 and Underlying Fills[3] (Figs. 4; 5:1–9)

The ceramic assemblage found in association with this series of floors is characteristic of sixth-century CE sites in Jerusalem, representing a fairly narrow chronological range. It includes a greater variety of vessel forms compared to the other contexts of Building 900, which in addition to tableware (bowls), preparation or serving wares (basins) and storage vessels (storage jars and jugs) commonly found elsewhere, also comprises an abundance of cooking wares (cooking pots, casseroles and casserole lids) and lamps. The assemblage consists of local and imported vessels, the latter including a relatively large quantity of Phocaean Red Slip bowl sherds, all of Form 3F (Figs. 4:1; 5:5). The basins comprise the arched-rim varieties, including plain basins (Fig. 4:8) and other, basins decorated with either combed bands of incised straight or wavy lines (Fig. 4:9), or with incised lines on the rim (Fig. 4:6, 7). Rounded casseroles with ribbed walls and two horizontal ridged handles (Fig. 4:11, 12), and matching lids (Fig. 4:10) belong to a long-lasting ceramic tradition of cooking ware; the fine finish of these vessels and their proportional form suggest a date in the fifth–sixth centuries CE. The storage jars include a short-necked form with a folded inverted rim (Fig. 5:2) and the nearly neckless Gaza amphorae with a simple thickened rim (Fig. 5:3, 4). Body sherds of Fine Byzantine Ware jugs made of light orange clay and bearing incised decoration (Fig. 5:6, 7), were also associated with the floors. The lamps are of the small candlestick form (Fig. 5:8, 9).

[3] Determining the date of this series of contexts was especially important and hence, the distinction is reiterated between baskets that comprise material collected above Floors 116A–C (Basket Nos. 2306 and 2322; see below Fig. 5:10–14) and those comprising material found in association with the floors and their makeup (Basket Nos. 2284, 2285, 2270 and 2325). In addition, it is noteworthy that none of the finds retrieved from the fills below the floors and their makeup were of a later date than the specimens associated with the floors and hence, only the specimens from the latter contexts are illustrated and described here.

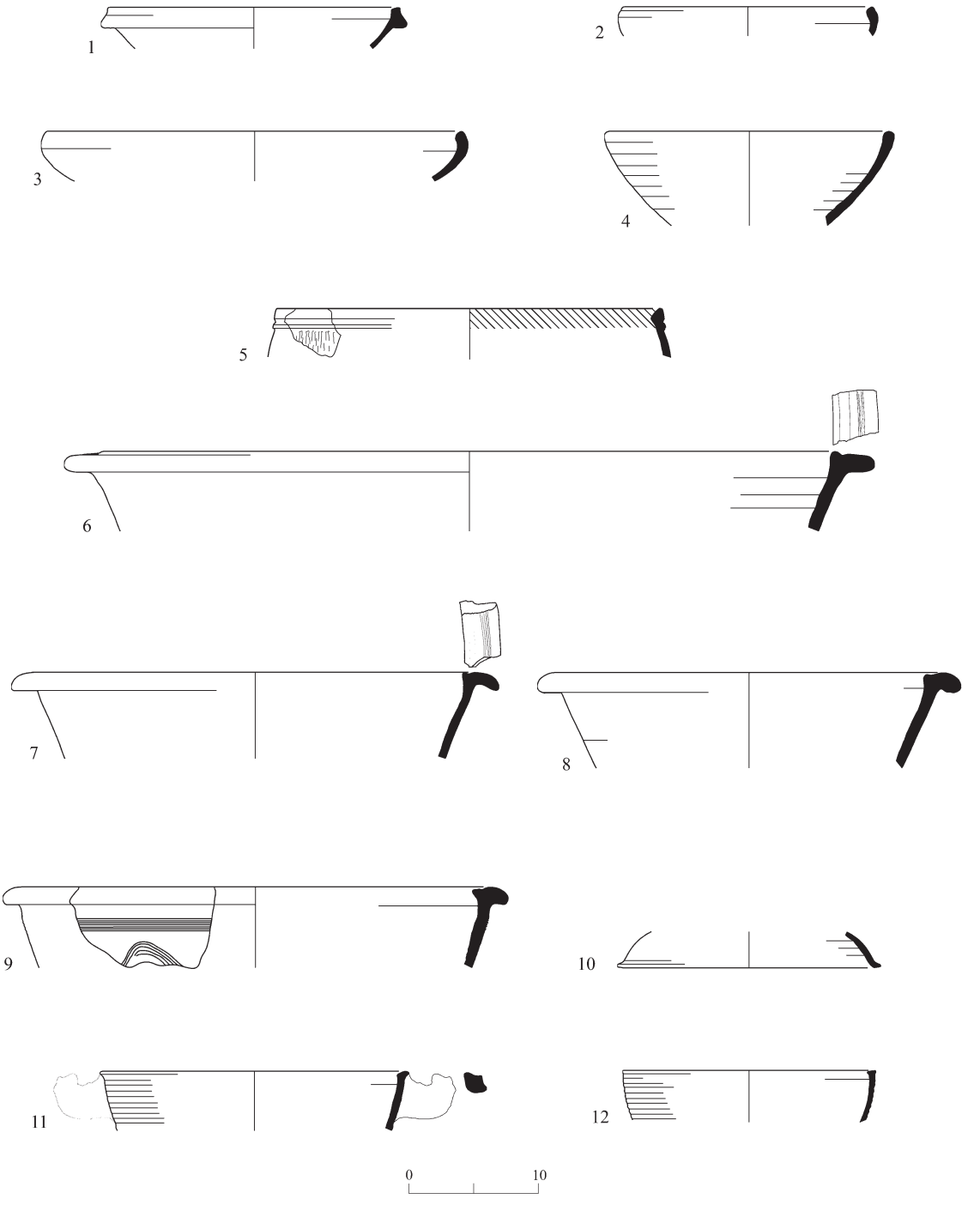

Fig. 4. Phase IIb pottery associated with Floors 116A–C and its Makeup 119.

◂ **Fig. 4**

No.	Vessel	Locus	Basket	Description	Parallels
1	Phocaean Red Slip Bowl Form 3F	116	2284/55	Well levigated orange ware; red slip	See Fig. 2:9
2	Bowl	119	2285/51	Light grayish-orange ware; white grits	Similar to Fig. 4:3, without the red slip
3	Rouletted Bowl Form 4	116	2284/57	Reddish-orange ware; white grits; red dulled slip on body; black slip on rim	Jerusalem, Giv‘ati Parking Lot, 3rd–4th c. (personal observation)
4	Bowl	116	2325	Red ware, decolorized on rim	
5	Rouletted-rim bowl Form 1	116	2284	Orange ware; red slip	Similar to Fig. 1:5 Jerusalem, Temple Mount, Stratum XX (Peleg and Adler 2007: Fig. 8.4:12)
6	Arched-rim basin Form 1	116	2270/51	Reddish-orange ware; gray core; orange ext.	See Fig. 1:8
7	Arched-rim basin Form 1	116	2270/52	Red ware; light brown core	See Fig. 1:8
8	Arched-rim basin Form 1	116	2284/54	Red ware; light brown core; pink ext.	See Fig. 1:8
9	Arched-rim basin Form 2A	116	2284/	Orange ware; gray core,	See Fig. 3:5
10	Casserole lid	116	2284/51	Dark reddish-brown ware	Jerusalem, late 3rd/early 4th–9th/10th c. (Magness 1993:215, No. 2)
11	Casserole	119	2285	Red ware	See Fig. 3:8
12	Casserole	116	2284/52	Red ware; gray core	See Fig. 3:8

The pottery evidence, especially the Phocaean Red Slip Form 3F bowls, the Gazan amphorae and the Fine Byzantine Ware jugs, suggests a date in the second half of the sixth–early seventh centuries CE for the construction of Floors 116A–C.

Material Above Floors 116A–C (Fig. 5:10–14)

Only a few diagnostic sherds were found above these floors: two sherds of Phocaean Red Slip Form 3F bowls (Fig. 5:10, 11); a coarsely made basin (Fig. 5:12); a storage jar with a short neck and an in-folded rim (Fig. 5:13); and a Gaza amphora (Fig 5:14). This small assemblage is identical in date to the one collected below Floors 116A–C and therefore, the last phase of usage of the space to which the floors belonged was close to the time that the floor was laid down, that is the late sixth century CE.

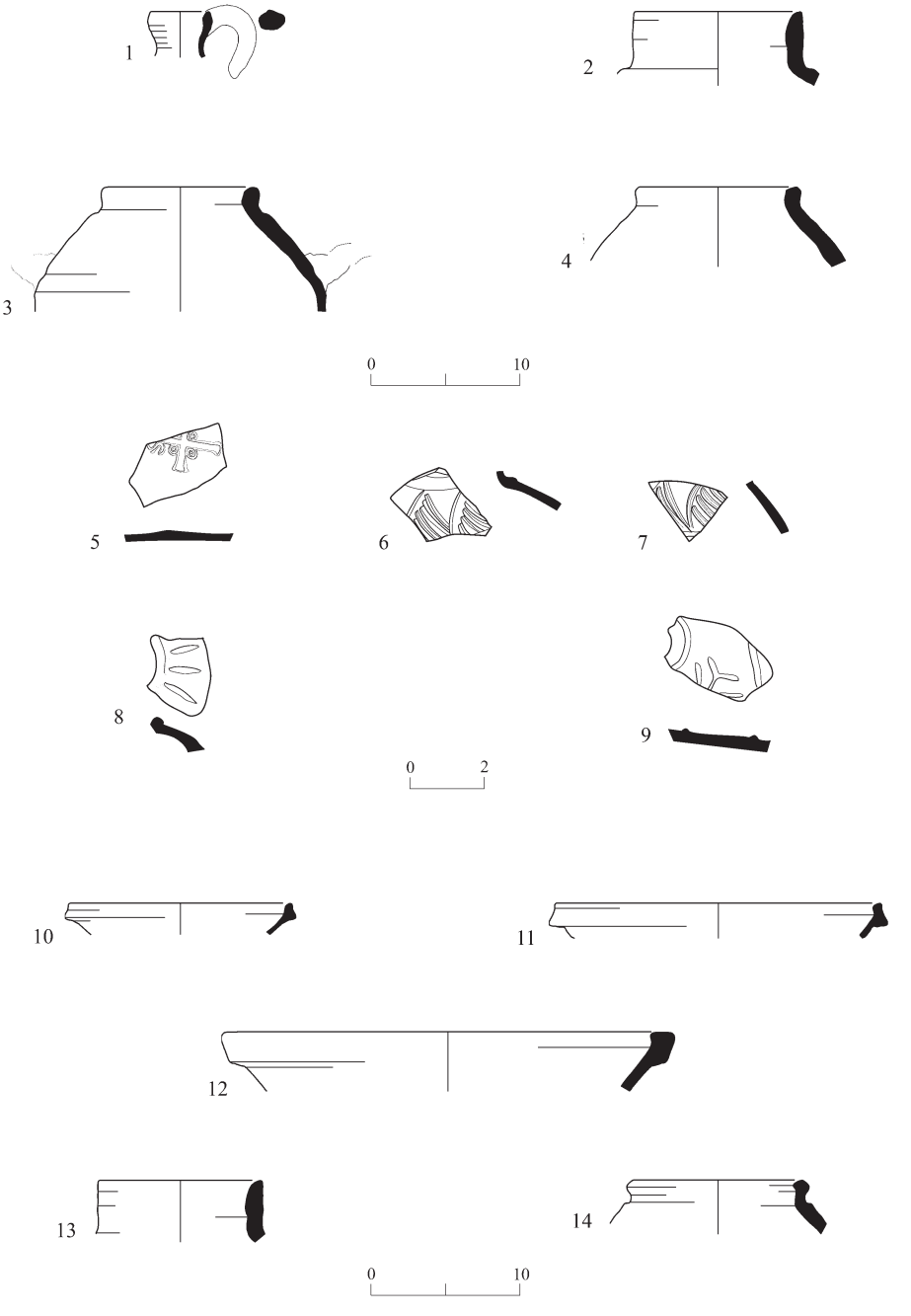

Fig. 5. Phase IIb pottery associated with Floors 116A–C (Nos. 1–9) and material found above the floor (Nos. 10–14).

◂ **Fig. 5**

No.	Vessel	Locus	Basket	Description	Parallels
1	Jug/juglet	116	2270	Orange ware; thick gray core	
2	Storage jar Form 4C	116	2270/53	Orange ware; pink ext.	Jerusalem, late 6th–7th c. (Magness 1993:224–225) Jerusalem, Giv‘ati Parking Lot, Phase VA floor, 6th c. (Balouka 2013:162, Fig. 6.5:4)
3	Gaza amphora Form 3	116	2284/58	Brownish-orange ware	See Fig. 3:13
4	Gaza amphora Form 3	116	2284/56	Light brown ware	See Fig. 3:13
5	Phocaean Red Slip bowl Form 3F	116	2270	Orange ware; stamped cross	See Fig. 2:9
6	Fine Byzantine Ware jug Form 2B	116	2325	Light orange ware; incised	Jerusalem, mid-6th–early 8th c. (Magness 1993:239–241)
7	Fine Byzantine Ware jug	116	2270	Light orange ware; incised	As No. 6
8	Small candlestick lamp	116	2296	Light orange ware; pink ext.	See Fig. 2:11
9	Small Candlestick lamp	116	2296	Red ware; buff ext.	See Fig. 2:11
10	Phocaean Red Slip bowl Form 3F	116	2306	Well-levigated orange ware; red slip; three ridges on the rim (not illustrated)	See Fig. 2:9
11	Phocaean Red Slip bowl Form 3F	116	2322	Well-levigated orange ware; red slip	See Fig. 2:9
12	Basin	116	2322/53	Dark brown, very coarse ware	
13	Storage jar	116	2322/52	Brownish-orange ware	See Fig. 5:2
14	Gaza amphora Form 3	116	2322/51	Light brown ware	See Fig. 3:13

Phase IIa

Matrix of Floor 208 (Fig. 6:1–4)

The scant pottery associated with this floor includes mostly fragmentary body sherds of storage jars (not illustrated) and jugs (Fig. 6:1–3). A small candlestick lamp (Fig. 6:4) was also found. The jug necks narrow toward the base and they have a flat collared rim. Such vessels are common in contexts dated from the third to the fourth centuries, and possibly also the early fifth century CE. The small candlestick lamp belongs to the most common lamp type found in excavations in Jerusalem, dating from the second half of the fourth to the mid-fifth/sixth century CE (Magness 1993:250–251; Rosenthal and Sivan 1978:112–114,

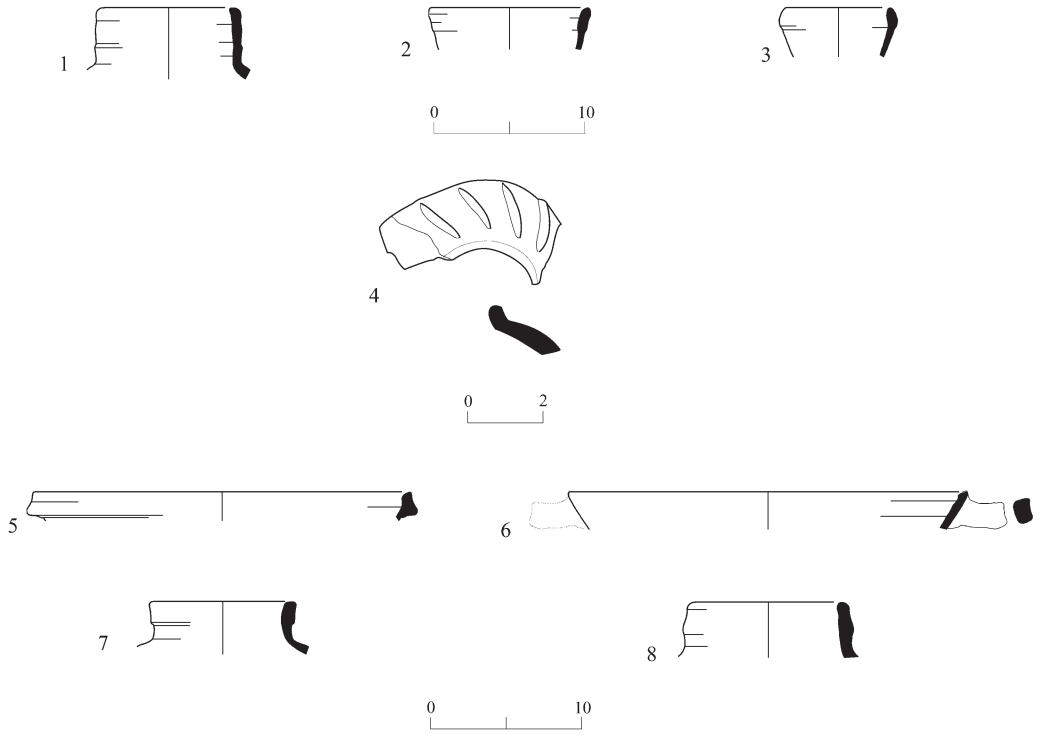

Fig. 6. Phase IIa pottery associated with Floor 208 (Nos. 1–4) and Fill 113 (Nos. 5–8).

No.	Vessel	Locus	Basket	Description	Parallels
1	Jug Form 2A	208	2541/51	Light red ware; dark matt red slip, darker on the rim	Jerusalem, 2nd–5th c. (Magness 1993:243) Giv‘ati Parking Lot, 3rd–first half of 4th c. (personal observation) Jerusalem, Temple Mount, 4th and possibly early 5th c. (Mazar and Gordon 2007:152, 154, Fig. 15.2:38)
2	Jug	208	2541/52	Gray ware	As No. 1
3	Jug	208	2541/53	Red ware; orange ext.; white grits	Similar to No. 1 Jerusalem, Temple Mount, 4th and possibly early 5th c. (Mazar and Gordon 2007:152, 154, Fig. 15.9:16)
4	Small candlestick lamp	208	2533	Light red ware	See Fig. 2:11
5	Phocaean Red Slip bowl Form 3F	113	2230	Orange ware, well-levigated; red slip	See Fig. 2:9
6	Casserole Form 1	113	2226	Dark red ware; white grits	Jerusalem, late 3rd/4th–8th c. (Magness 1993:211–213, Nos. 3, 4) Jerusalem, beneath the Nea Church, 5th–first half of 6th c. (Magness 2012:282–284, Pl. 9.2:7) Jerusalem, Temple Mount, 4th and possibly early 5th c. (Mazar and Gordon 2007:151, 154, Fig. 15.3:15)

◂ **Fig. 6**

No.	Vessel	Locus	Basket	Description	Parallels
7	Storage jar	113	2230/51	Gray ware	Caesarea, Vault 1, Class 62, 4th–7th c. (Blakely and 1987: Figs. 41:176–178) Bet She'an, north gate and complex of warehouses/shops, late 6th–early 7th c. (Sandhaus, forthcoming) Pella, late 5th–6th c. (Watson 1992: Fig. 9.64; McNicoll 1992: Pl. 110.9)
8	Storage jar Type 1b	113	2230/52	Yellowish-red ware	Caesarea, hippodrome (Riley 1975:28.2–4); submerged tower, 6th–7th c. (Magness 1992: Fig. 68:4); Vault 1, Class 46, 5th–7th c. (Blakely 1987: Fig. 39:153); Stratum 4, late Byzantine building, early 7th c. (Adan-Bayewitz 1986: Fig. 1:6, Ill. 92); Stratum 5, late 5th–6th c. (Bar-Nathan and Adato 1986: Fig. 1:13) Bet She'an, north gate and complex of warehouse/shops, late 6th–early 7th c. (Sandhaus, forthcoming) 'Atlit, Class 46, 5th–6th c. (Peacock and Williams 1986: Pl. 110:23)

Nos. 453–459), providing a date for the construction of Floor 208. However, considering that the estimated date of the Phase IIb Building 900 was not earlier than the mid-sixth century CE (see above), it may be concluded that the floor of Phase IIa was laid down sometime during the second half of this century.

Fill 113, Sealed by W2 (Fig. 6:5–8)

This assemblage comprises sherds of a Phocaean Red Slip Form 3F bowl (Fig. 6:5); a casserole with flat walls and two horizontal handles (Fig. 6:6); a Bet She'an storage jar (Fig. 6:7) made of gray-colored clay, with a short neck and an out-folded rim; and a storage jar with a short thickened neck and a simple rim (Fig. 6:8), made of sandy yellowish-red ware indicating a coastal provenance for its manufacture.

The Phocaean bowl and the two types of storage jars suggest a date in the sixth century CE for this assemblage (see Hayes 1972:329–338, Fig. 69:25; 1980:526; Magness 1993:226; Sandhaus, forthcoming).

Discussion and Conclusions

The pottery from the excavation of Building 900 in the southern Tyropoeon Valley allowed a fairly precise determination of the chronology of the two Byzantine-period occupation phases, despite the small area exposed. The construction of the Phase IIb buildingdoes not

predate the mid-sixth century CE, while the use of the floors of this phase is dated to the sixth century. The material found in association with the floor foundation of Phase IIa and the fills below them suggests a construction date in the late sixth–early seventh centuries CE, aligning with the sixth-century date of the pottery from the wall foundation trenches. Significantly, the material from this later occupation phase includes an abundance of vessel types that are known to have appeared only after the mid-sixth century, e.g., Gaza amphorae Form 3 and Fine Byzantine Ware jug). It seems, therefore, that the construction of both phases of the building occurred within the sixth century CE, most likely during its latter half, indicating that the Byzantine-period structure was in use for a relatively short time overall, possibly a maximum of about 50 years.

The pottery from this excavation presents a rich assemblage of vessel forms, continuing types known from the Late Roman period, some of which (e.g., casseroles, casserole lids and basins) underwent only minor stylistic changes over time, becoming coarser in form. Among the latter forms are the locally produced rouletted bowls with modeled rims and red-slipped jugs. Imported wares, represented by Phocaean Red Slip bowls, appear mainly in the late occupation Phase IIa.

The pottery assemblages from both occupation phases of the Byzantine period are characteristic of a domestic context wherein everyday household activities took place, including cooking and serving vessels. Hence, the parts of Building 900 exposed in the present excavation seem to have functioned as the kitchen, storage or dining rooms.

References

Adan-Bayewitz D. 1986. The Pottery from the Late Byzantine Building (Stratum 4) and Its Implications. In L.I. Levine and E. Netzer. *Excavations at Caesarea Maritima 1975, 1976, 1979—Final Report* (Qedem 21). Jerusalem. Pp. 90–129.

Balouka M. 2013. The Late Roman and Byzantine Pottery. In D. Ben-Ami. *Jerusalem: Excavations in the Tyropoeon Valley (Giv'ati Parking Lot)* I (IAA Reports 52). Jerusalem. Pp. 151–166.

Bar-Nathan R. and Adato M. 1986. Byzantine Pottery (Stratum 5). In L.I. Levine and E. Netzer. *Excavations at Caesarea Maritima 1975, 1976, 1979—Final Report* (Qedem 21). Jerusalem. Pp. 132–136.

Blakely J.A. 1987. *The Pottery and Dating of Vault 1: Horreum, Mithraeum and Later Uses* (ASOR; The Joint Expedition to Caesarea Maritima Excavation Reports IV). Lewiston, N.Y.

Hayes J.W. 1972. *Late Roman Pottery*. London.

Hayes J.W. 1980. *A Supplement to Late Roman Pottery*. London.

Magness J. 1992. Late Roman and Byzantine Pottery, Preliminary Report, 1990. In R.L. Vann ed. *Caesarea Papers: Straton's Tower, Herod's Harbour, and Roman and Byzantine Caesarea* (*JRA* Suppl. S. 5). Ann Arbor. Pp. 129–153.

Magness J. 1993. *Jerusalem Ceramic Chronology: Circa 200–800 CE* (*JSOT*/ASOR Monograph Series 9). Sheffield.

Magness J. 2005. The Roman Legionary Pottery. In B. Arubas and H. Goldfus eds. *Excavations on the Site of the Jerusalem International Convention Center (Binyanei Ha'uma): A Settlement of the Late First to Second Temple Period, the Tenth Legion's Kilnworks, and a Byzantine Monastic Complex; The Pottery and Other Small Finds* (*JRA* Suppl. S. 60). Portsmouth, R.I. Pp. 69–191.

Magness J. 2006. Late Roman and Byzantine Pottery. In H. Geva. *Jewish Quarter Excavations in the Old City of Jerusalem Conducted by Nahman Avigad 1969–1982* III: *Area E and Other Studies; Final Report*. Jerusalem. Pp. 184–191.

Magness J. 2012. Late Roman and Byzantine Pottery from the Cardo and the Nea Church. In O. Gutfeld. *Jewish Quarter Excavations in the Old City of Jerusalem Conducted by Nahman Avigad, 1969–1982* V: *The Cardo (Area X) and the Nea Church (Areas D and T); Final Report*. Jerusalem. Pp. 282–300.

Majcherek G. 1995. Gazan Amphorae: Typology Reconsidered. In H. Meyza and J. Młynarczyk eds. *Hellenistic and Roman Pottery in the Eastern Mediterranean: Advances in Scientific Studies (Acts of the II Nieborów Pottery Workshop, Nieborów, 18–20 December 1993).* Warsaw. Pp. 163–178.

Mazar E. and Gordon B. 2007. The Pottery from the Peristyle and Southern Houses. In E. Mazar. *The Temple Mount Excavations in Jerusalem 1968 –1978 Directed by Benjamin Mazar; Final Reports* III: *The Byzantine Period* (Qedem 46). Jerusalem. Pp. 149–176.

McNicoll A.W. 1992. *Pella in Jordan* 2: *The Second Interim Report of the Joint University of Sydney and College of Wooster Excavations at Pella 1982–1985* (*MA* Suppl. 2). Sydney.

Peacock D.P.S. and Williams D.F. 1986. *Amphorae and the Roman Economy: An Introductory Guide.* London–New York.

Peleg O. and Adler N. 2007. The Pottery Assemblage from a Byzantine Building in Area XVI. In E. Mazar. *The Temple Mount Excavations in Jerusalem, 1968–1978 Directed by Benjamin Mazar; Final Reports* III: *The Byzantine Period* (Qedem 46). Jerusalem. Pp. 23–34.

Riley J.A. 1975. The Pottery from the First Session of Excavations in the Caesarea Hippodrome. *BASOR* 218:25–63.

Rosenthal R. and Sivan R. 1978. *Ancient Lamps in the Schloessinger Collection* (Qedem 8). Jerusalem.

Rosenthal-Heginbottom R. 2011. The Pottery Assemblage from Locus 6032. In E. Mazar. *The Temple Mount Excavations in Jerusalem, 1968–1978 Directed by Benjamin Mazar; Final Reports* IV: *The Tenth Legion in Aelia Capitolina* (Qedem 52). Jerusalem. Pp. 195–227.

Rosenthal-Heginbottom R. 2014. Dating the Jerusalem Rilled-Rim and Arched-Rim Basins. In N. Poulou-Papadimitriou, E. Nodarou and V. Kilikoglou eds. *LRCW4. Late Roman Coarse Wares, Cooking Wares and Amphorae in the Mediterranean; Archaeology and Archaeometry. The Mediterranean: A Market without Frontiers* I (BAR Int. S. 2616). Oxford. Pp. 657–664.

Sandhaus D. Forthcoming. The Pottery from the Warehouse near the Northeastern Gate of the City. In G. Mazor and A. Najjar. *Bet She'an* V: *The City Gates and the Northern Entrances of the City* (IAA Reports). Jerusalem.

Szanton N. and Uziel J. This volume. A Byzantine and Early Islamic Building along the Southern Tyropoeon Valley.

Watson P. 1992. Change in Foreign and Regional Economic Links with Pella in the Seventh Century A.D.: The Ceramic Evidence. In P. Canivet and J.-P. Rey-Coquais eds. *La Syrie de Byzance à l'Islam VIIe–VIIIe siècles (Actes du Colloque international Lyon–Maison de l'Orient méditerranén, Paris–Institut du monde arabe, 11–15 septembre 1990)*. Damascus. Pp. 233–248.

Vincenz A. de. 2007. The Pottery. In Y. Hirschfeld. *En-Gedi Excavations* II: *Final Report (1996–2002)*. Jerusalem. Pp. 234–427.